XFLOW

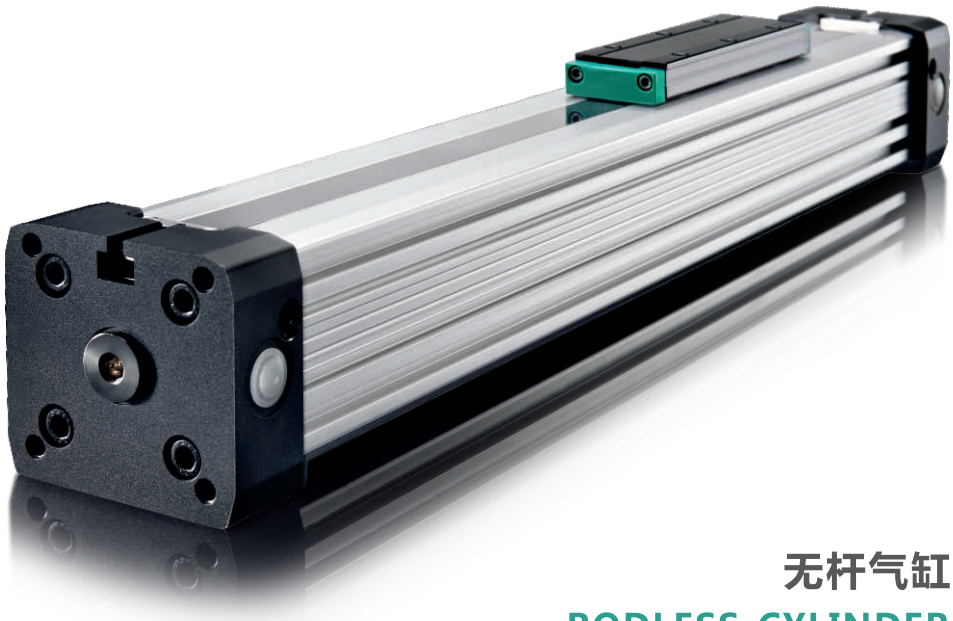

无杆气缸

RODLESS CYLINDER

www.xflow-world.com

兴富隆工业有限公司（Xflow Industry Co., Ltd.）是一家集研发，制造和销售气动元件、真空元件及自动化相关产品的技术性企业。公司团队与成立于1992年的德国MEDAN GMBH有着密切合作关系，立足于以科技为本的理念，根据客户需求，准确、快速地提供优质产品及解决方案，帮助客户实现降低企业成本，提高生产效率。

本着以卓越的品质、迅速的交货期以及完美的销售服务为目的，2015年，兴富隆与MEDAN GMBH 在大陆共同设立机械式无杆气缸组装车间及仓库。来自德国工厂的原装进口产品，保证了兴富隆将以具有卓越德国品质的产品服务客户。

MEDAN GmbH, a privately owned family business with innovative marketing strategies and extensive technical know-how. Founded in 1992, it has focused on the manufacture and marketing of linear actuators for the automation of simple and complex specialized work processes. Headquarters and production facility is the tradition-conscious town Bempflingen near to Reutlingen.

MEDAN is a professional in the field of pneumatic or electric linear technology. As a flexible and efficient company understands MEDAN the implementation of special requirements of its customers as a natural service and performs the tasks always reliable in terms of functionality, quality and delivery of - and at competitive prices. MEDAN-products makes the versatile and can be used worldwide.

Quality to MEDAN not only means fulfilling individual clients requests, but with a service that comprehensively exceed expectation. Also for special-purpose solutions, we guarantee a short delivery time.

As system developer and supplier, we analyse our clients needs and work as partner in one direction - linear. We keep things moving linear!

You profit from our strength with in excess of 20 years of experience, a large range of products, high quality components, fast and innovative development processes, all based on professional competence with a wide structured know-how.

Against the common trend within the German industrial landscape, MEDAN is comitted to Germany as its production site, now and in the future . The production of each cylinder is produced and controlled in house - carrying a, Made in Germany seal of approval for your ultimate confidence.

MEDAN is characterised not only for high quality products but also consistently for its philosophy of the market, which is permanently extended and communicated intensively.

You benefit from MEDAN’ s service due to low overhead costs, short lead times and dependable delivery we are able to offer the optimum price-perfomance ratio . We maintain a customer focussed approach, thus we are a linear step ahead of the competition. Together we develop in drive technology industry, marketing products that have minimal downtime and cost, with the smallest maintenance expenses. We operate a continuous improvement program, developing existing and new products utilising proven components ensuring you get the best, most reliable product at the right price.

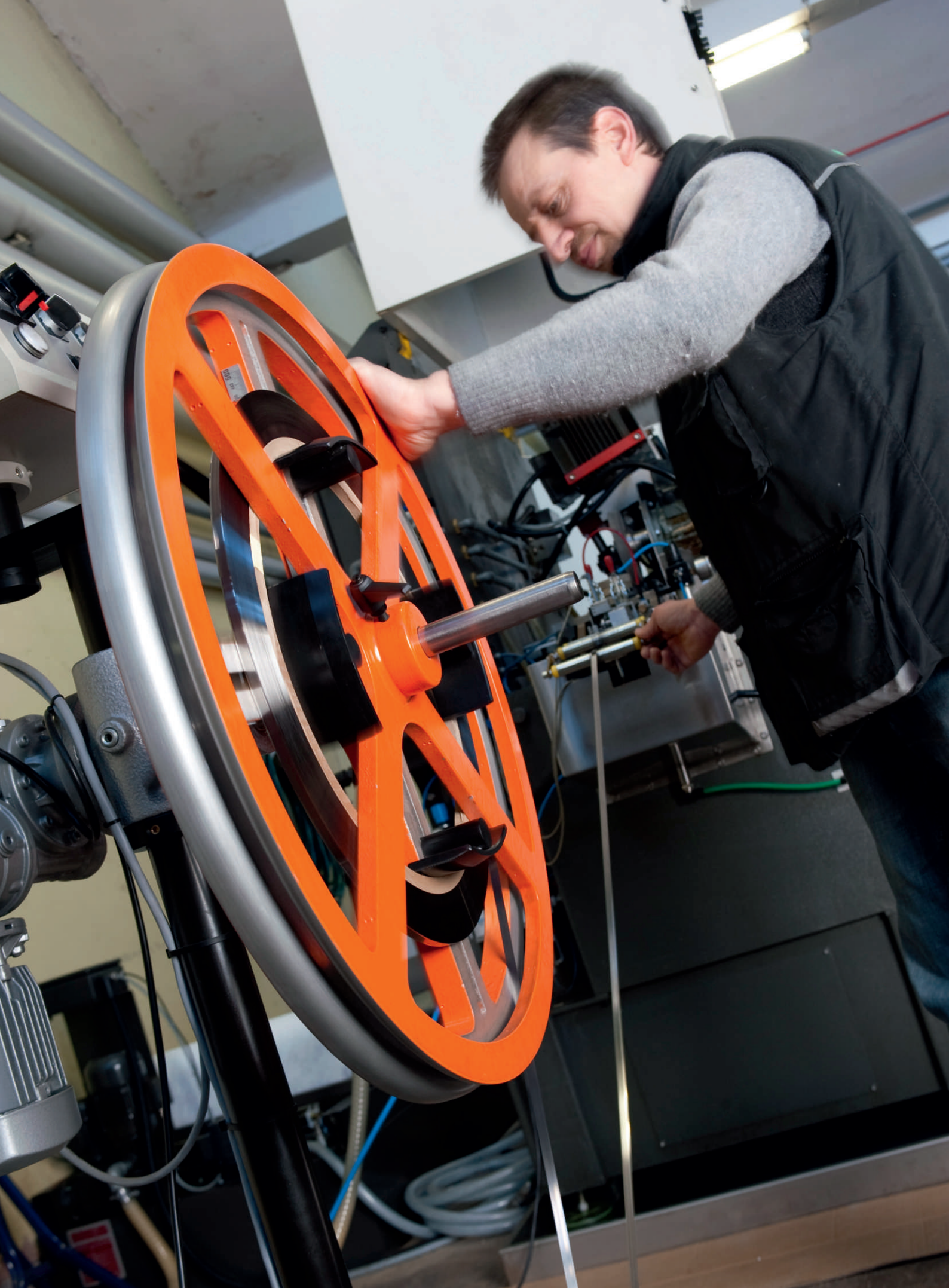

目录/Index

特别申明：

由于本公司无杆气缸项目一直稳步发展。本目录册仅与目前的产品现状相符。

我们一直致力于高标准的生产、检验、测试和改进，因此我们将保留对产品在外观、可靠性、功能和设计方面的改进作进一步说明的权利。

对本目录册由于印刷错误引起的问题，我们将不承担任何责任。所有此前发布的目录册失效。

About this catalogue

The program of the MEDAN cylinder is in a steady development. This catalogue is corresponding to the present developing situation. MEDAN GMBH is committed to a very high standard of manufacturing, inspection, testing and improving. Therefore we reserve the right tomake occasional changes.The publishing of this catalogue goes along without any obligations in regards of any misprints or mistakes. All pre-vious catalogues loose their legal validity.

无杆气缸

RODLESS CYLINDER

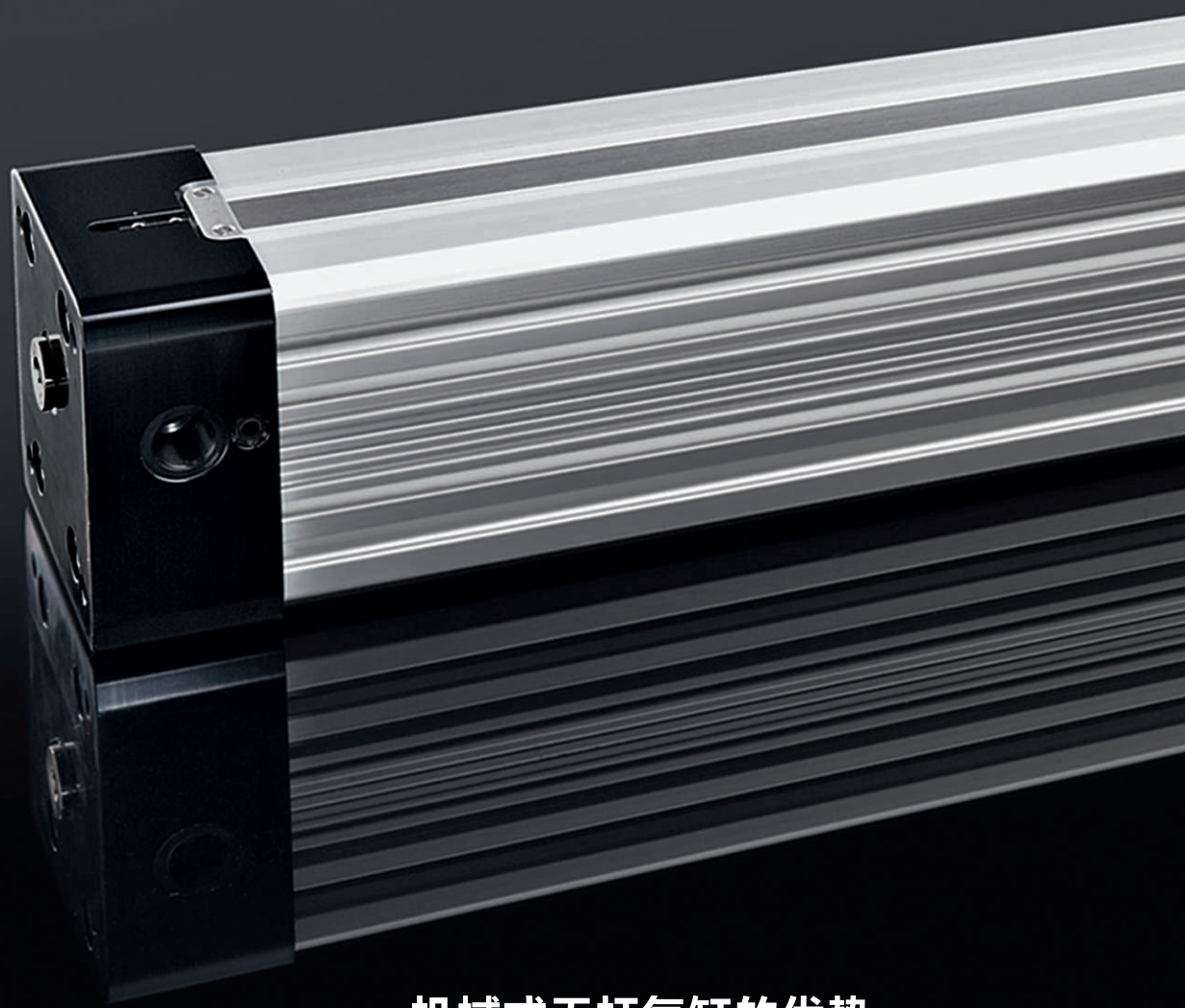

机械式无杆气缸的优势

力和速度可以更快速直接地调整与切换。
更快的运作速度。
在允许的范围内气缸可以直接负载。
气路产生的余热不会集中在气缸上。
更清洁，更环保。
管路产生的废气可以直接排放。
可用于防爆场合。

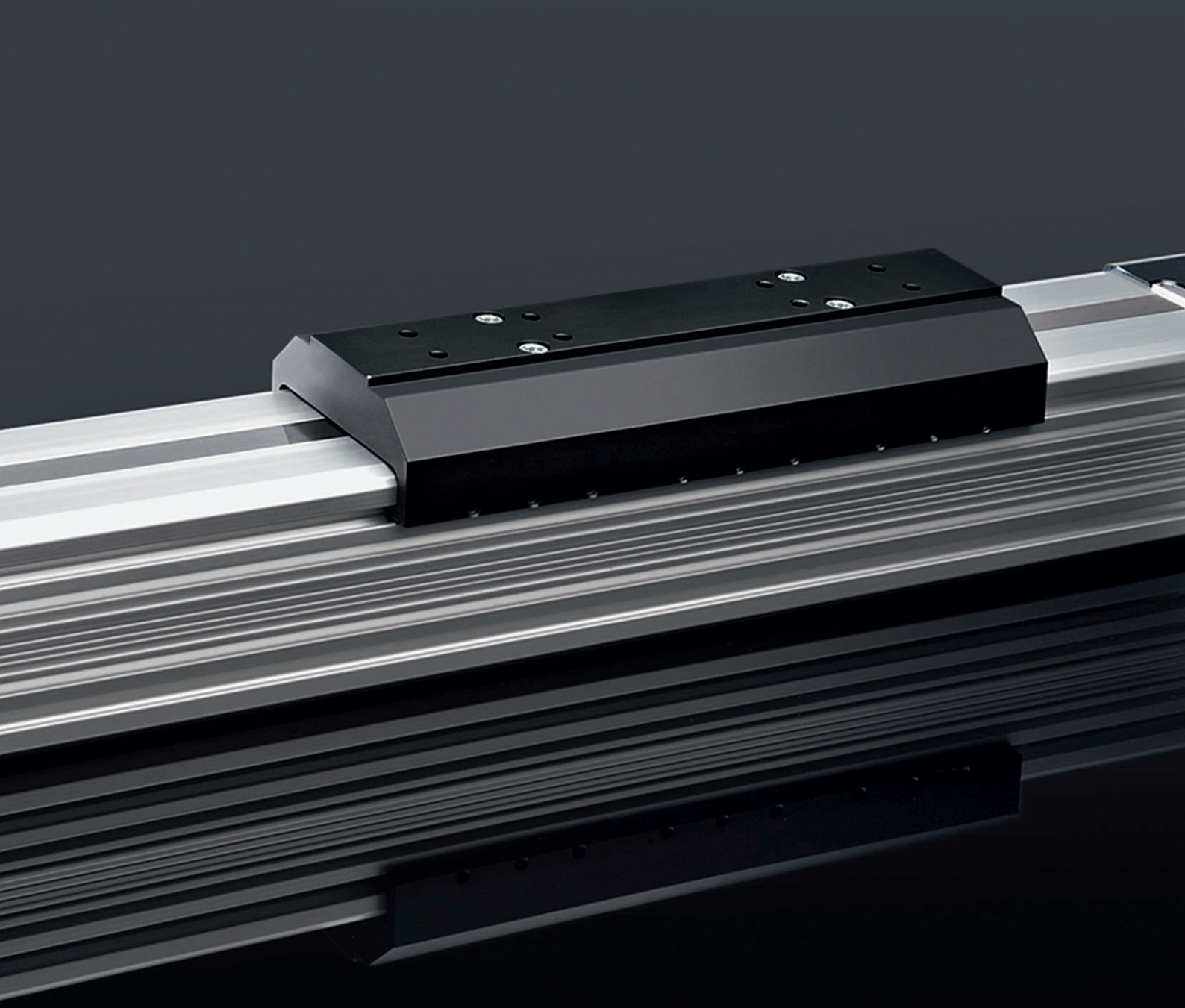

ADVANTAGES OF PNEUMATIC DRIVE TECHNOLOGY

Force and speed of the rodless cylinder are directly switchable.
Great attainable operating speed.
Rodless cylinders are able to be overloaded without damage.
Waste heat is centrallised at the compressor, not at the decentralised drive units.
Clean, environmentally friendly medium.
The waste air can be exhausted directly to surrounding atmosphere.
Compressed air is insensitive in the proximity of both magnetic impulses and atomic radiation.
Use in EX - area possible (Atex.)

构造
Construction

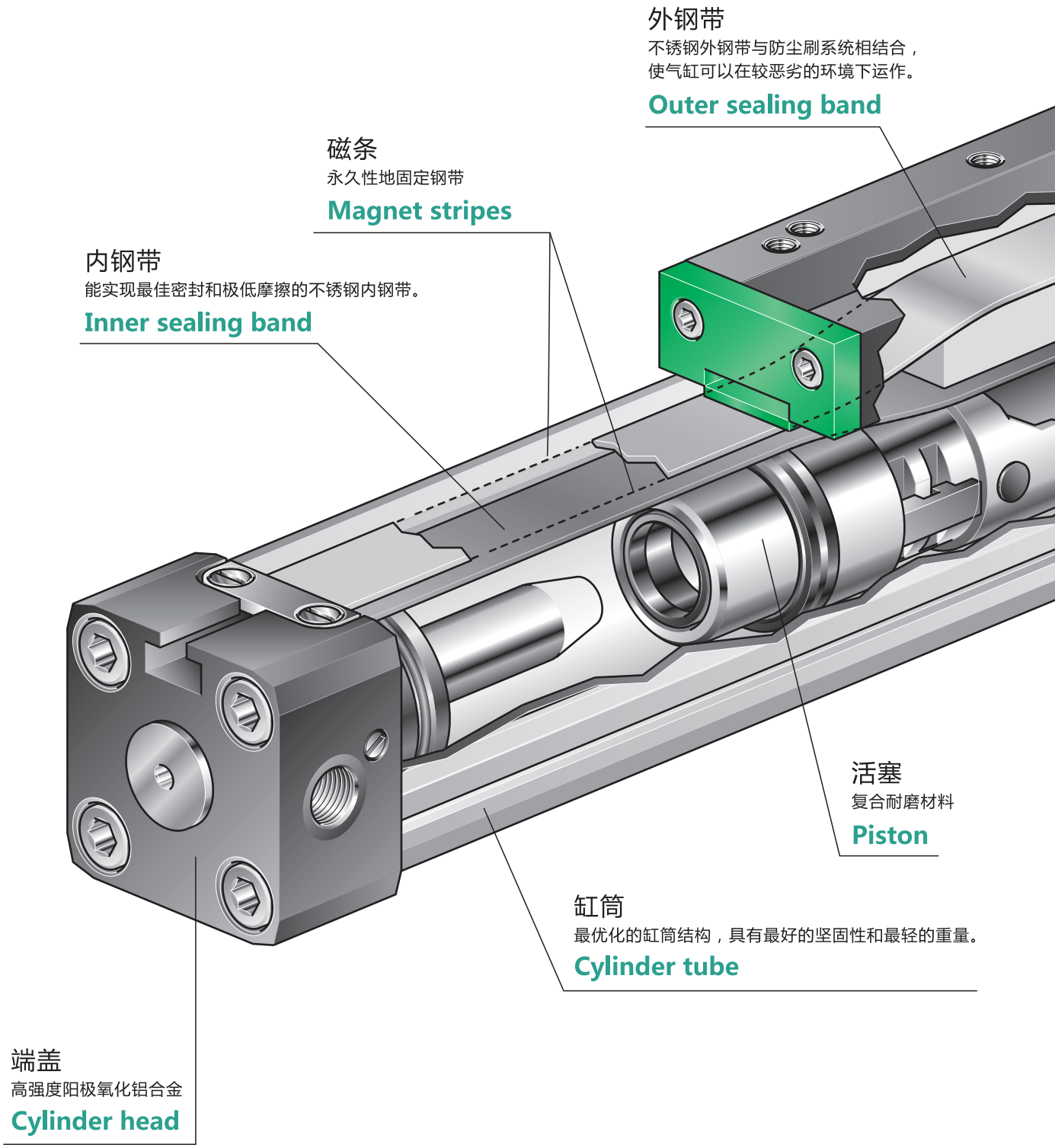

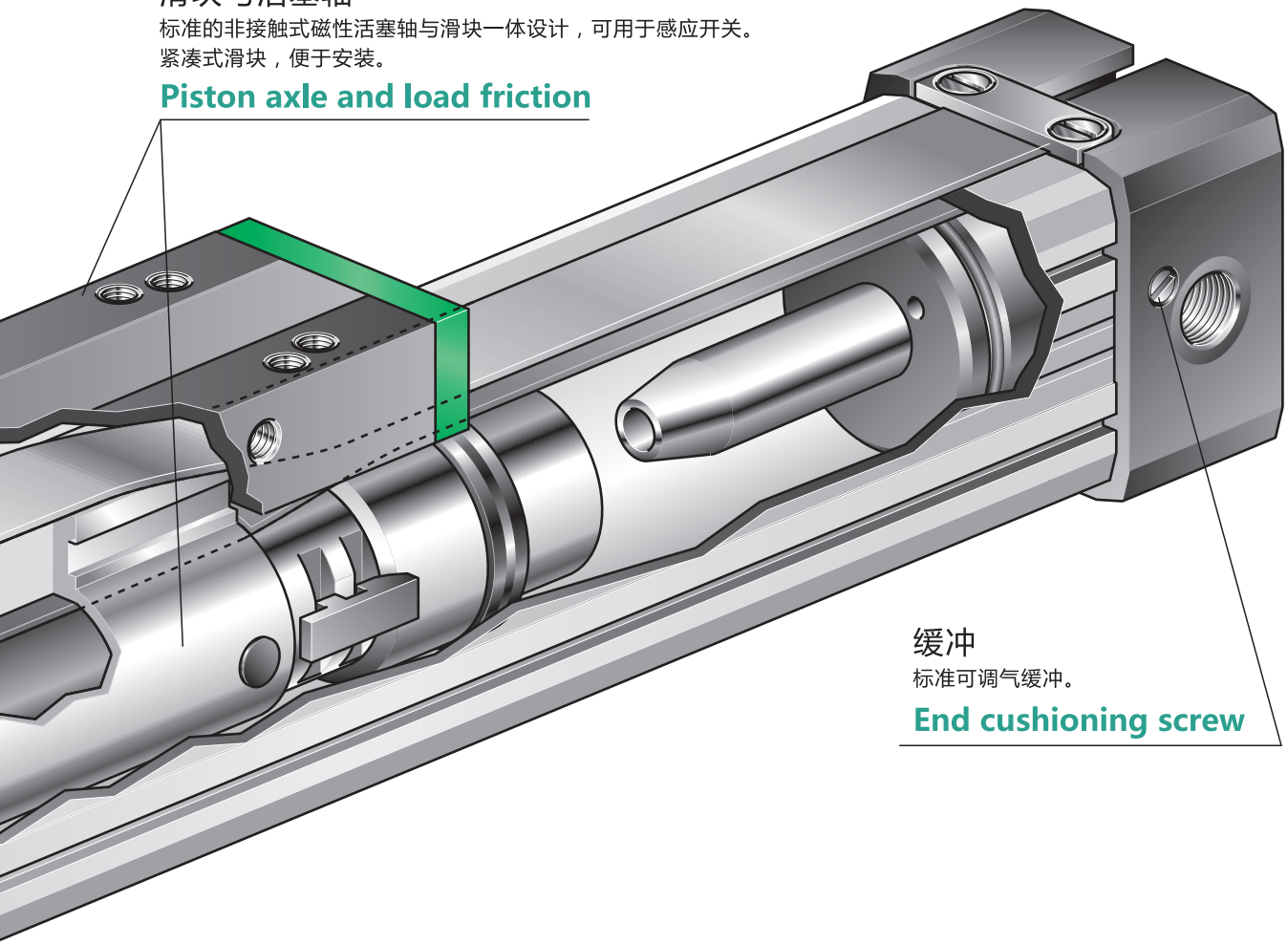

应用 / APPLICATIONS

PL 系列 Serie

PLF 系列 Serie

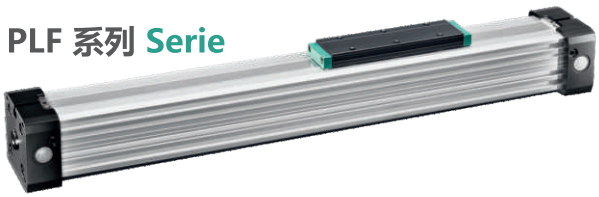

- 可用于水平，垂直以及倾斜的负载运动
- 可直接作为单轴，双轴，三轴以及平行轴运动设计中的机械模块
- 可用于输送，包装以及各种不同的搬运系统

- Can be used for horizontal, vertical and diagonal load movements
- Can be used as a load-bearing machine element in a single, double or multiple as well as in a parallel actuater design
- Can be used in transport, packing, filling, handling, door systems etc.

PL-SERIE

PL 系列

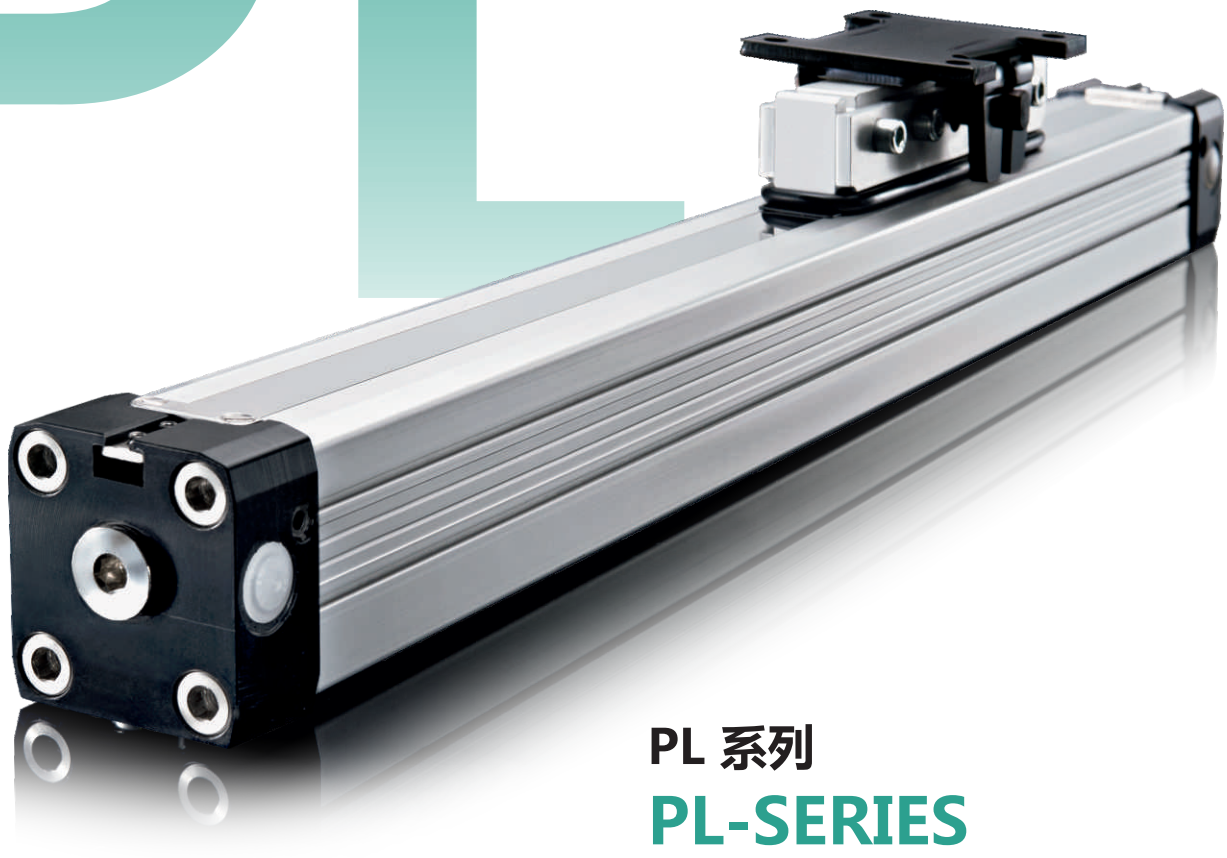

PL 系列

PL-SERIES

THE CLASSIC

滑块运动的沟槽于轴向贯通整个缸筒，气缸作用力由与活塞成一体的滑块来传递。

推力传递原理如下：
压缩空气推动内部活塞侧面，带动外部滑块做对应方向运动。

气缸内部的沟槽位置由极其光滑的精磨不锈钢带来保证密封，沟槽两侧的磁条保证了内钢带始终处于同一个位置不变。外钢带与防尘刷系统可以防止灰尘进入气缸内部。

活塞与滑块内部具有独特的导向槽，当滑块运动或静止时，内外钢带在活塞内部是分离的，外钢带被拉高，内钢带则低于滑块，而活塞两侧的内外钢带很牢固地附着在沟槽两侧。

The entire tube is slotted throughout its full length. The force is transmitted through the load friction, which is attached to the piston axle.
The design of the piston axle is that way that the inner part of the piston axle is connected through the slot with the outer part of it.

Therefore the force transmission runs as follows:
Air pressure > Piston area > piston axle (inner part) > piston axle (outer part) > load friction > load.
The sealing of the cylinder slot is garanteed by a most precisely grinded inner steel band. The inner band is kept in position due to magnet stripes which are placed on both sides of the slot. In addition there is an outer steel band covering the slot in order to keep dust out of inner space of the cylinder.

During piston movement as well as during stillstand of it both steelbands are lifted right after the piston seal and led through the piston axle by means of a separate own guiding chanel. Before and behind the piston axle both bands are covering the slot permanently again.

优势 / BENEFITS

- 活塞两端作用力相同
- 作用力传递直接，扭矩安全
- 标准活塞附磁，可订购无磁活塞
- 结构独特，节约50%安装空间
- 可达5700mm长行程
- 端盖具有三个不同方向的供气口及可调气缓冲
- 运行反应快，活塞可高速运动
- 可根据用户要求进行灵活设计
- 无润滑压缩空气供给或润滑压缩空气供给**

可接受特殊订货要求

注意：在将润滑压缩空气供给换成无润滑压缩空气供给之前，气缸必须拆卸清洁，重新加入润滑脂，正确组装后方可。

- Equal forces on both ends of the piston
- Force connection direct, torque safe
- Piston with or without magnets
- 50% space-savings
- Long strokes up to 5700mm
- End caps with 3 air connections and adjustable cushioning
- Fast acceleration and high piston velocity
- Very flexible in the user`s design
- Non lubricated or lubricated air supply**)

*) Special Version On request

**) Attention: Before changing operation from lubricated to nonlubricated air the cylinder has to be disassembled, cleaned, newly greased and reassembled

技术参数 / TECHNICAL DATA

设计	无杆气缸、双动				Design	Rodless cylinder, double acting			
行程					Strokes				
ø 16 mm	100–4400mm, 1mm的增量				ø 16 mm	100–4400mm, in increments of 1mm			
ø 25-40 mm	100–5700mm, 1mm的增量 (可按要求制作更长的行程)				ø 25-40 mm	100–5700mm, in increments of 1mm (longer strokes on request)			
供气口	Ø16	Ø25	Ø32	Ø40	Air connection	Ø16	Ø25	Ø32	Ø40
	M5	G1/8	G1/4	G1/4		M5	G1/8	G1/4	G1/4
安装位置	自由安装				Mounting	free			
力 + 力矩	见负载，作用力和力矩图表				Forces + moments	see Forces and moments			
支撑力	见中部支撑图表				Support Forces	see Deflection Diagram			
缓冲长度	见缓冲图表				Cushion Length	see Cushion Diagram			
温度	–10°C ~ +80°C（其他温度范围可定制）				Temperatures	–10°C ~ +80°C (other temperatures on request)			
压力范围	0,5–8,0 bar				Pressure range	0,5–8,0 bar			
介质	压缩空气，过滤最大50微米				Medium	compressed air, filtered max. 50µm			
材料					Materials				
缸筒	高强度阳极氧化铝合金				Barrel	High-strength anodized aluminum			
端盖	高强度阳极氧化铝合金				End caps	High-strength anodized aluminum			
活塞轴	高强度阳极氧化铝合金				Piston axle	High-strength anodized aluminum			
密封件	耐油合成材料（NBR：v < 1m/s，VITON 可选：v ≥ 1m/s）				Seals	Oilproof synthetic material (NBR: v< 1m/s , VITON: v ≥ 1m/s)			
密封带	不锈钢				Sealing bands	Stainless steel			
活塞	耐磨合成材料				Piston caps	Wear proof synthetic material			
滑动件	耐磨合成材料				Sliding parts	Wear proof synthetic material			

气缸外形尺寸 / CYLINDER DIMENSIONS

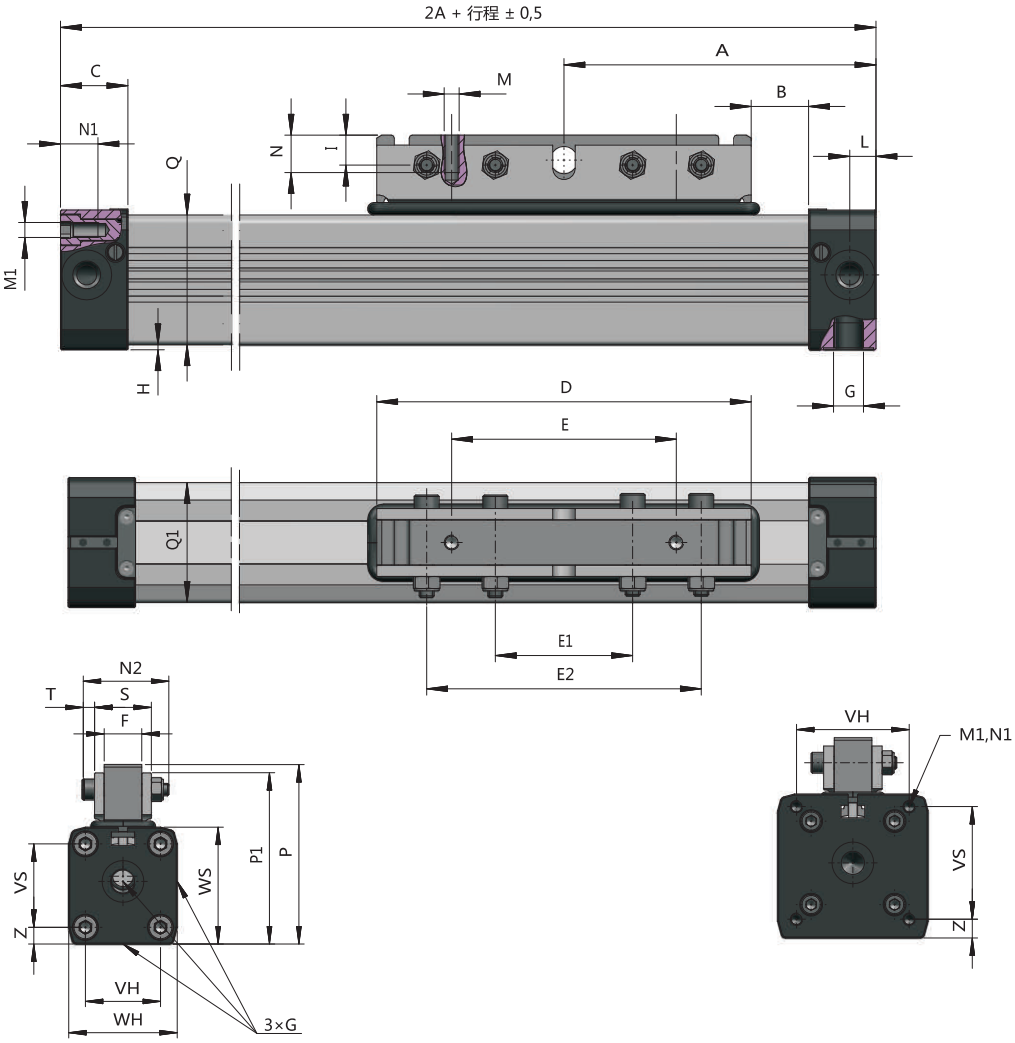

Ø16, 25, 32

Ø40

Ø	A	B	C	D	E	E1	F	G	I	L	M	M1	N1	N2	P-P1
16	65	12	15	76	48	32	10	M5	6	5,5	M4	M3	7	27	43,5 - 42,3
16L	90	37	15	76	48	32	10	M5	6	5,5	M4	M3	7	27	43,5 - 42,3
25	100	17	23	120	80	50	15	G1/8'	13	8,5	M5	M5	10	35	66-58
25L	150	67	23	120	80	50	15	G1/8'	13	8,5	M5	M5	10	35	66-58
32	125	23	27	150	90	55	18	G1/4'	12	10,5	M6	M6	14	41	86-82
32L	200	23	27	300	180	120	18	G1/4'	12	10,5	M6	M6	14	41	86-82
40	150	45	30	150	90	55	18	G1/4'	12	15	M6	M6	17	41	97-93
40L	250	70	30	300	180	120	18	G1/4'	12	15	M6	M6	17	41	97-93

Ø	P1	QxQ1	E2	H	S	T	VH	WH	VS	WS	Z
16	37,5	24,5x25	64	1,0	18	4	18	27	18	27	4,5
16L	37,5	24,5x25	64	1,0	18	4	18	27	18	27	4,5
25	53	36x36	100	2	23	5	27	40	27	40	6,5
25L	53	36x36	100	2	23	5	27	40	27	40	6,5
32	74	52x51	110	2	27	6	36	52	40	56	8
32L	74	52x51	240	2	27	6	36	52	40	56	8
40	85	58x58	110	7	28	6	54	72	54	69	9
40L	85	58x58	240	7	28	6	54	72	54	69	9

- 16L-40L长活塞型适用于弯曲力矩大，扭矩大，垂直移动的场合。
- P1：可根据客户要求定制，尺寸表中为标准尺寸。
- Z：可根据客户要求定制，尺寸表中为标准尺寸。

- 16L – 40L : Cylinder with longpiston for heavy bending and torque moments.
- P1: variable on request/details for standard Dimension is mentioned first.
- Z*:variable on request/details for standard performance are in bold letters.

负载，作用力和力矩 / FORCES AND MOMENTS

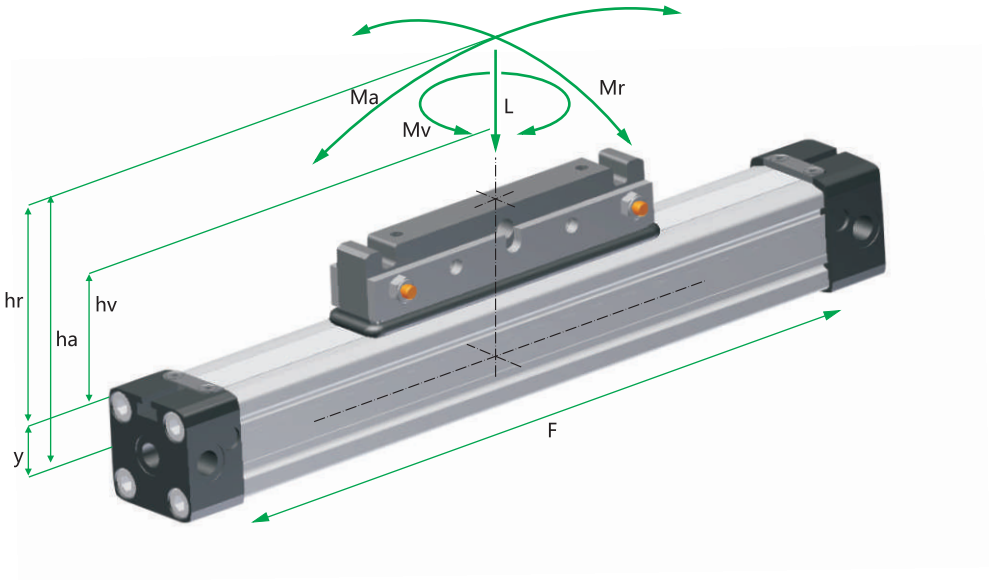

公式 /

FORMELN

$M_a = F * h_a$

$M_r = F * h_r$

$M_v = F * h_v$

气缸		有效作用力 (N)	缓冲长度	最大允许 负载(N)	最大允许 弯曲力矩(Nm)		最大允许 扭矩(Nm)
		at 6 Bar	(mm)	PL	PL		PL
Ø	Y	F	S	L	Ma 轴向	Mr 径向	Mv 中心
16	9	110	15	120	4	0,3	0,3
25	14	250	21	300	15	1,0	3,0
32	18	420	26	450	30	2,0	4,5
40	22	640	32	750	60	4,0	8,0

Cylinder		Effect Force (N)	Cushioning	Max. allowed load (N)	Max. allowed bending moments (Nm)		Max. allowed torque (Nm)
		at 6 Bar	(mm)	PL	PL		PL
Ø	Y	F	S	L	Ma axial	Mr radial	Mv zentral
16	9	110	15	120	4	0,3	0,3
25	14	250	21	300	15	1,0	3,0
32	18	420	26	450	30	2,0	4,5
40	22	640	32	750	60	4,0	8,0

以上数据显示了在轻负载，无震动操作时的最大值，即使在动态情况下，也不应该超出此值。
负荷与力矩数据以最大压力6bar，速度V≤0.2m/sec(PL系列)，速度V≤0.45m/sec(PLF系列)为基准。

注意：当气缸作用力时，应该考虑到不同负载和应用所产生的摩擦力，鉴于一些不确定的使用场合，以上数值应减少10-20%。

我们将乐于在特殊应用方面给您一些建议。

The figures above are max. values based on light shock free duty and speed of v≤ 0,2m/sec [PL-series] – v ≤ 0,45m/sec [PLF-series]. Max. pressure 6 bar.
An exceeding of the values in dynamic operations, even for short moments, has to be avoided.

Attention: Resulting forces could lead to extreme exceedings of the values. In case of undefinable situations the above max. values have to be underrun by 10–20%.

Please ask our sales representatives

缓冲图表 / CUSHIONING DIAGRAM

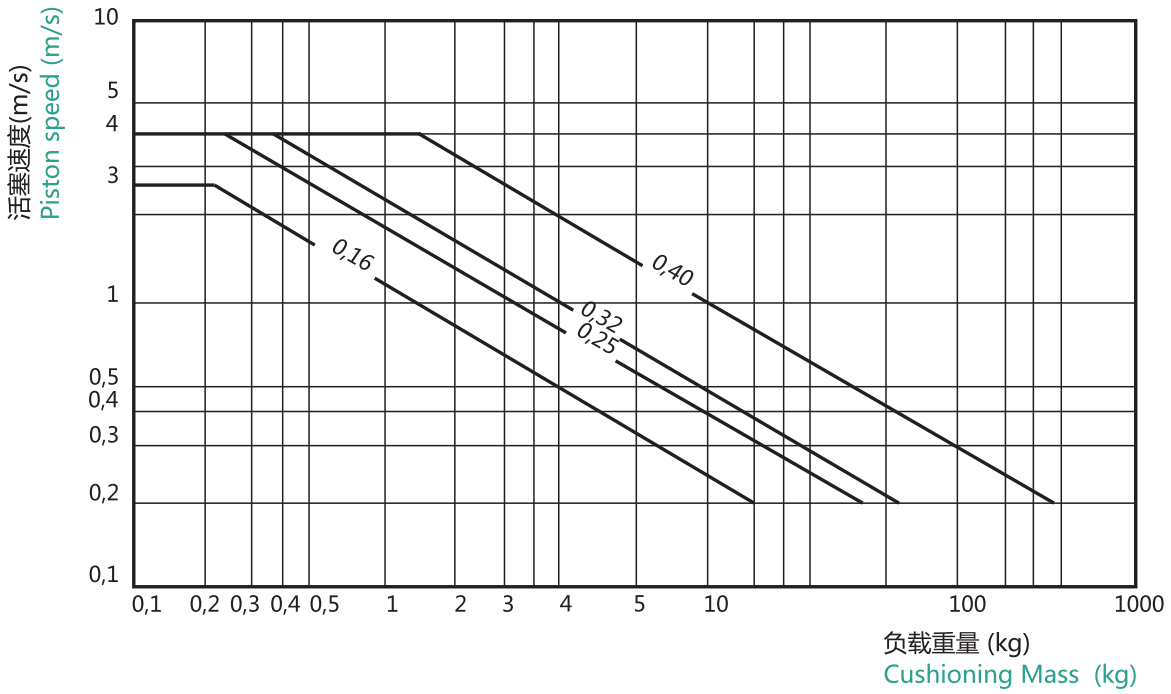

请注意以下事项:

- 如果超出以上图标允许范围，必须安装附加的缓冲器。
- 当活塞运动速度大于1m/sec，则建议使用VITON密封圈。
- 当活塞速度V≤0.1m/sec(NBR)，V≤0.2m/sec(VITON)，需要更换成低速润滑油脂。
- 密封件最长使用寿命是基于活塞运动速度V≤1m/sec。

Pay attention to the following points:

- If the limits above are exceeded additional shock absorbers are necessary.
- For piston speeds of more than ≥ 1m/s viton seals are recommended.
- For piston speeds ≤ 0,1m/s (NBR), ≤ 0,2m/s (VITON) slow speed lubrication is necessary see at sperpart kids
- Maximum duration life will be achieved when piston speeds do not exceed 1m/s.

2000

1500

扰度图表 / DEFLECTION DIAGRAM

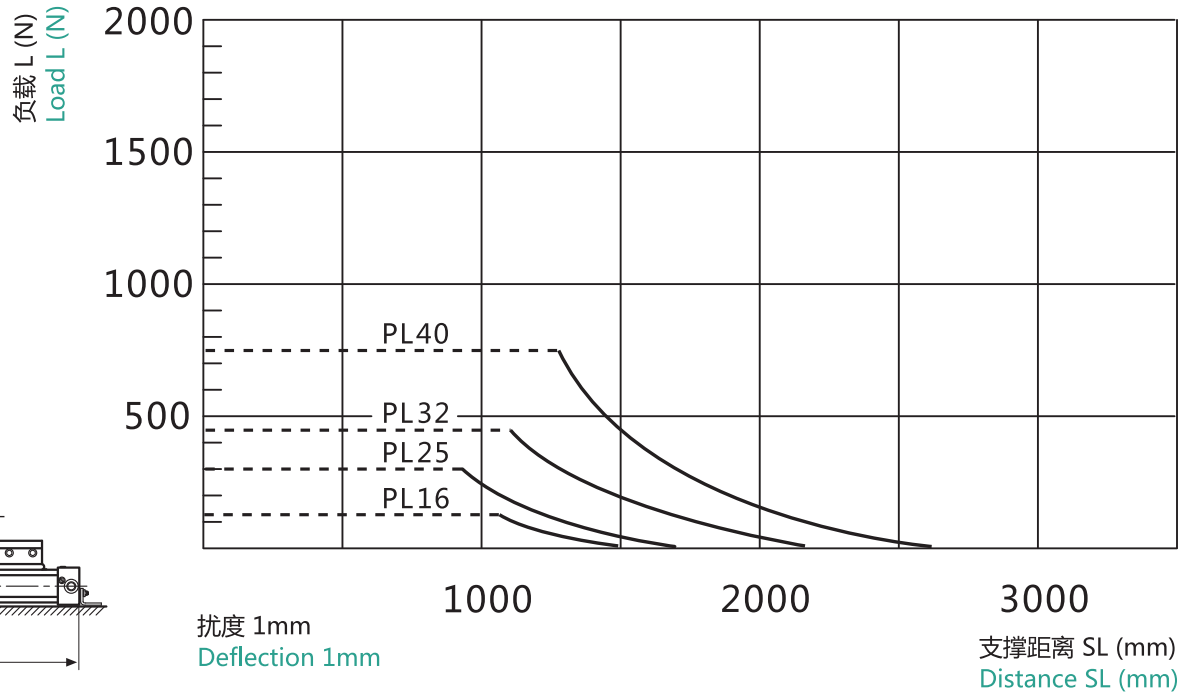

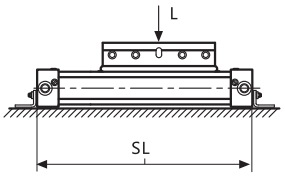

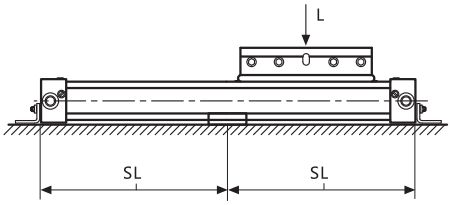

若小于最大支撑距离 SL (mm)，则无需中部支撑配件（No. 25)
max. distance SL (mm)- free of mounting (No. 25)

中部支撑相关信息：

- 在图表最大负载（L）的作用下，支撑之间气缸产生0.5-1mm的扰度是允许的。
- 在图表最大负载（L）的作用下，支撑之间气缸产生1-1.5mm的扰度，则必须增加中部支撑配件。

Diagram Information:

- Calculated deflections without support of 0,5 – 1mm allow exceeding of supporting distance.
- Calculated deflections without support of 1mm – max 1,5mm require reduction of the supporting distance.

安装配件尺寸 / MOUNTINGS DIMENSIONS

端盖支架（脚架）/ End cover bracket (foot)

24/1.0 - 2.0*

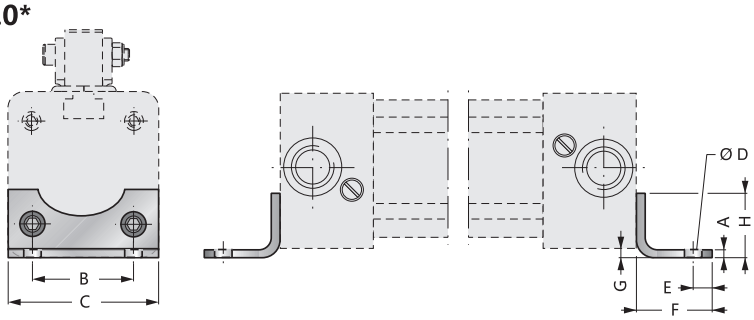

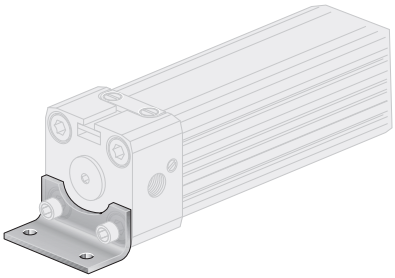

24/3.0 - 4.0*

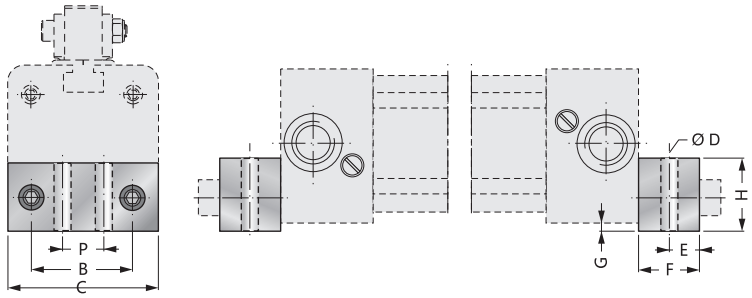

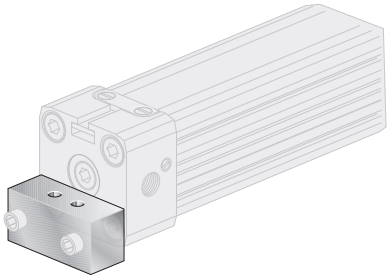

中部支撑座 / Mid section support

25/1.0 - 2.0*

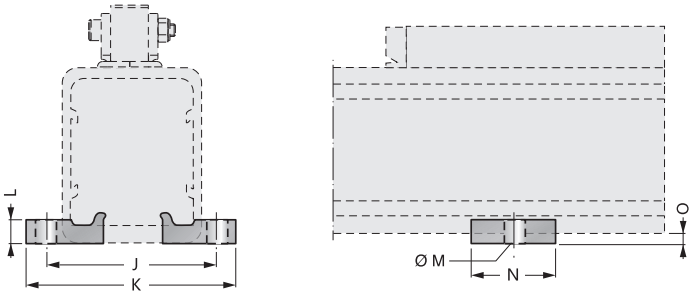

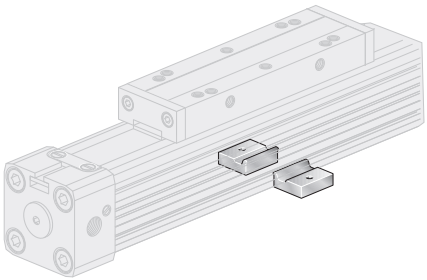

25/3.0 - 4.0*

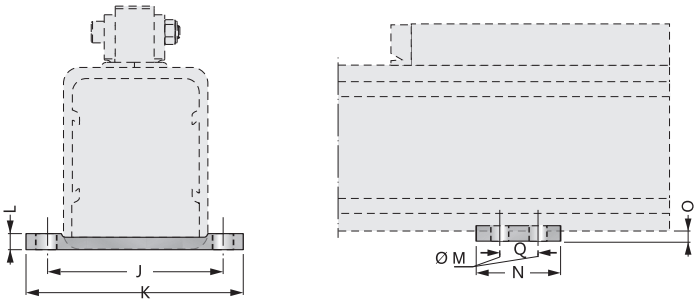

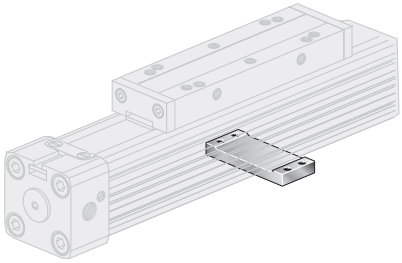

ø	A	B	C	D	E	F	G	H	J	K	L	M	N	O	P	Q
16	1,6	18	26	3,6	4,0	14	1,5	12,5	41	53,5	5	ø5,5	20	3	-	-
25	2,5	27	40	5,5	6,0	22	2	18	48	60	6	ø5,5	20	4	-	-
32	-	36	51	6,6	8,0	24	4	20	61	73	10	ø6,5	55	6	20	40
40	-	54	71	9	11,5	24	2	20	70	85	10	ø6,5	60	7,2	30	45

安装配件尺寸 / MOUNTINGS DIMENSIONS

G型活动中部支撑座，用于气缸Ø16，25，32

Mobile Mid Section Support, Type G for Cylinder Ø16, 25, 32

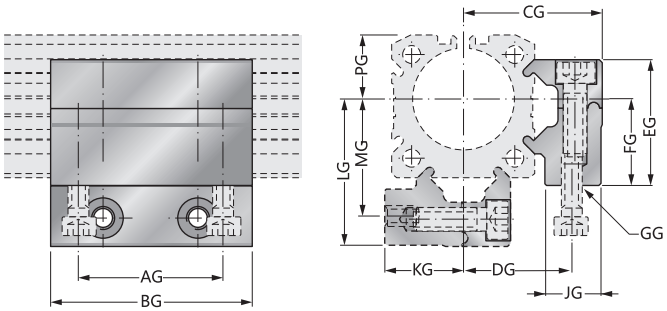

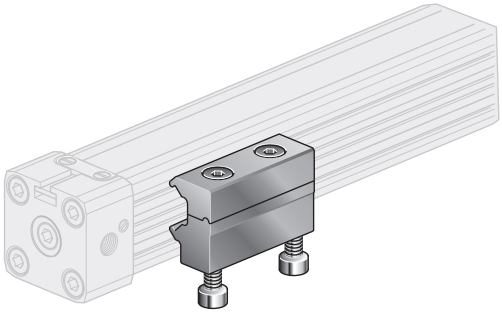

ø	AG	BG	CG	DG	EG	FG	GG	JG	KG	LG	MG	PG
16	18,0	30,0	27,5	18,4	21,0	15,0	M4	11,5	13,9	29,0	19,7	10,8
25	36,0	50,0	34,5	27,0	31,3	22,0	M5	14,0	20,0	36,5	29,0	16,0
32	36,0	50,0	41,8	34,2	39,0	30,0	M6	14,0	27,6	47,0	39,5	21,5

W型活动中部支撑座，用于气缸Ø16，25，32

Mobile Mid Section Support, Type W for Cylinder Ø16, 25, 32

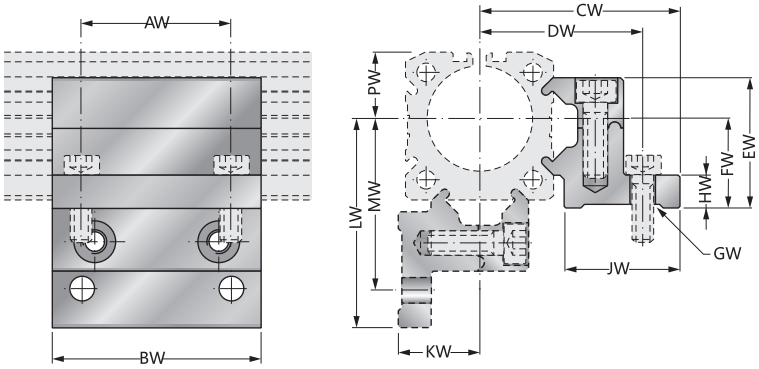

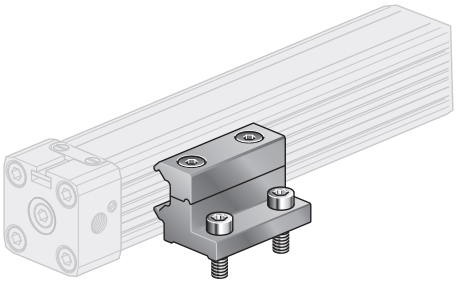

ø	AW	BW	CW	DW	EW	FW	GW	HW	JW	KW	LW	MW	PW
16	18,0	30,0	37,0	32,5	21,0	15,0	ø4,5	6,0	22,4	13,9	38,0	32,9	10,8
25	36,0	50,0	47,5	40,0	31,3	22,0	ø5,5	10,0	26,0	20,0	49,5	42,0	16,0
32	36,0	50,0	56,0	47,4	39,0	30,0	ø6,5	10,0	28,5	27,6	61,0	52,5	21,5

安装配件尺寸 / MOUNTINGS DIMENSIONS

浮动式托架 / Articulated carrier

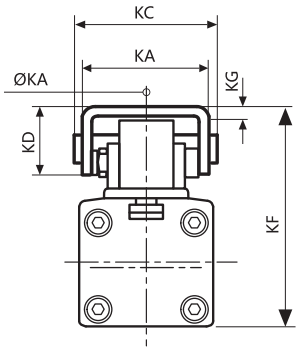

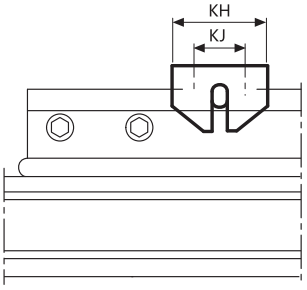

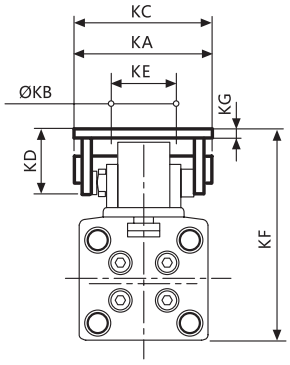

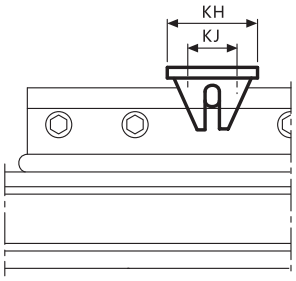

T型托架 / T-load

226 + 227/3-4

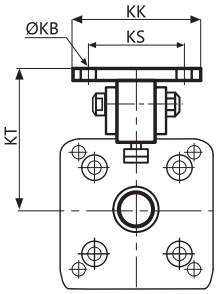

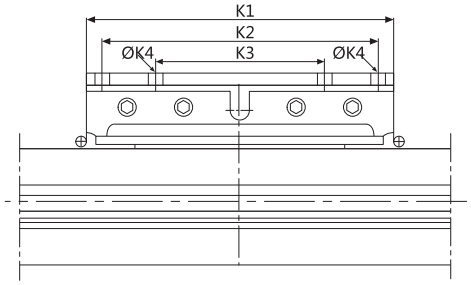

No. 226/3-4 为短 T 型托架 (2 孔)
No. 226/3-4 short T-load

No. 227/3-4 为加长 T 型托架 (4 孔)
No. 227/3-4 long T-load

ø	KA	KB	KC	KD	KE	KF*	KG	KH	KJ	KK	KS	KT	K1	K2	K3	K4
16	25	4,5	28	12	-	47-50	2	20	10	-	-	-	-	-	-	-
25	37	5,5	42	20	-	72-75	3	30	16	-	-	-	-	-	-	-
32	70	7,0	70	38	55	91-100	5	90	75	60	45	58,5	150	-	80	7
32L	-	7,0	-	-	-	-	-	-	-	60	45	58,5	300	160	80	7
40	70	7,0	70	38	55	111-120	5	90	75	60	45	63	150	-	80	7
40L	-	7,0	-	-	-	-	-	-	-	60	45	63	300	160	80	7

- KF尺寸在滑块安装槽的范围内是可变的。
- 特殊尺寸可定制，请联系我们的销售代表。

- * KF-Dimensions are variable within the length of the slot of the load friction.
- Extra dimensions on request.

气缸 PL / CYLINDER PL

• • • • 行程尺寸 (0100-5700 mm)
• • • • Ident-figures for stroke definition (0100-5700 mm)

ø 16-40mm - PL 16-40/00-22

型号	定购码	描述	Types	Ident.-N0.	Description
PL 16/00 PL 25/00 PL 32/00 PL 40/00	11.690. • • • • 12.590. • • • • 13.190. • • • • 14.190. • • • •	标准 00: v=1 m/s 标准负载连接滑块 丁腈橡胶密封件 10.9 镀锌螺丝 3 向供气口	PL 16/00 PL 25/00 PL 32/00 PL 40/00	11.690. • • • • 12.590. • • • • 13.190. • • • • 14.190. • • • •	Standard 00: v=1 m/s Regid load connection NBR-seals screws 10.9 zinc plated 3-air connections
PL 16/01 PL 25/01 PL 32/01 PL 40/01	11.680. • • • • 12.580. • • • • 13.180. • • • • 14.180. • • • •	特殊01： 不锈钢螺丝 其它同标准 00	PL 16/01 PL 25/01 PL 32/01 PL 40/01	11.680. • • • • 12.580. • • • • 13.180. • • • • 14.180. • • • •	Special 01: as Standard 00, but screws stainless steel
PL 16/02 PL 25/02 PL 32/02 PL 40/02	11.670. • • • • 12.570. • • • • 13.170. • • • • 14.170. • • • •	特殊02： v = 1 m/s 氟橡胶密封件 其它同标准 00	PL 16/02 PL 25/02 PL 32/02 PL 40/02	11.670. • • • • 12.570. • • • • 13.170. • • • • 14.170. • • • •	Special 02: as Standard 00, but v = 1 m/s Viton-seals
PL 16/03 PL 25/03 PL 32/03 PL 40/03	11.660. • • • • 12.560. • • • • 13.160. • • • • 14.160. • • • •	特殊03： v=1 m/s 氟橡胶密封件 不锈钢螺丝 其它同标准 00	PL 16/03 PL 25/03 PL 32/03 PL 40/03	11.660. • • • • 12.560. • • • • 13.160. • • • • 14.160. • • • •	Special 03: as Standard 00, but v=1 m/s Viton-seals screws stainless steel
PL 32/05 PL 40/05	13.195. • • • • 14.195. • • • •	特殊05： 短T型托架(2孔) 其它同标准 00	PL 32/05 PL 40/05	13.195. • • • • 14.195. • • • •	Special 05: as Standard 00, but T-load connection short, with 2 connection bores
PL 32/09 PL 40/09	13.199. • • • • 14.199. • • • •	特殊09： 长T型托架(4孔) 其它同标准 00	PL 32/09 PL 40/09	13.199. • • • • 14.199. • • • •	Special 09: as Standard 00, but T-load connection long, with 4 connection bores
PL 16/10 PL 25/10 PL 32/10 PL 40/10	11.698. • • • • 12.598. • • • • 13.198. • • • • 14.198. • • • •	标准10： 长活塞 推荐用于垂直运动	PL 16/10 PL 25/10 PL 32/10 PL 40/10	11.698. • • • • 12.598. • • • • 13.198. • • • • 14.198. • • • •	Standard 10: long piston recommended for vertical movement

ø 16-40mm - PL 16-40/20-22

型号	定购码	描述	Types	Ident.-N0.	Description
PL 16/20 PL 25/20 PL 32/20 PL 40/20	11.692. • • • • 12.592. • • • • 13.192. • • • • 14.192. • • • •	标准20： V = 1m/s 浮动式托架 丁腈橡胶密封件 10.9镀锌螺丝 3向供气口	PL 16/20 PL 25/20 PL 32/20 PL 40/20	11.692. • • • • 12.592. • • • • 13.192. • • • • 14.192. • • • •	Standard 20: v=1 m/s flexible load connection NBR-seals screws 10.9 zinc plated 3-air connections
PL 16/22 PL 25/22 PL 32/22 PL 40/22	11.672. • • • • 12.572. • • • • 13.172. • • • • 14.172. • • • •	特殊22： 浮动式托架 V = 1m/s 氟橡胶密封件	PL 16/22 PL 25/22 PL 32/22 PL 40/22	11.672. • • • • 12.572. • • • • 13.172. • • • • 14.172. • • • •	Special 22: flexible load connection v=1 m/s VITON-seals

安装配件 / CYLINDER MOUNTINGS

型号	定购码	气缸-ø	描述	Types	Ident.-N0.	Zyl. -ø	Description
端盖支架（脚架） 24/1.0 24/2.0 24/3.0 24/4.0 24/3.1	89.581.0001 89.582.0001 89.583.0001 89.584.0001 89.583.2011	PL 25 PL 32 PL 40 PL 32	组装套件 24/: 2 只脚架 4 只 DIN912 标准的 10.9 镀锌螺丝 组装套件用于 PL32 直立安装	Cylinder mounting 24/1.0 24/2.0 24/3.0 24/4.0 24/3.1	89.581.0001 89.582.0001 89.583.0001 89.584.0001 89.583.2011	PL 25 PL 32 PL 40 PL 32	Connection set 24/.: 2 brackets 4 screws 10.9 zinc plated acc. DIN 912 Connection set for PL 32 upright
中部支撑 25/1.0 25/2.0 25/3.0 25/4.0	89.581.0002 89.582.0002 89.583.0012 89.584.0005	PL 16 PL 25 PL 32 PL 40	组装套件 25/: 中部支撑配件 阳极氧化铝合金	Cylinder mounting Fixation 25/1.0 25/2.0 25/3.0 25/4.0	89.581.0002 89.582.0002 89.583.0012 89.584.0005	PL 16 PL 25 PL 32 PL 40	Connection Set 25/.: body brackets anodised aluminium
浮动式托架 225/1 225/2 225/3 225/4	89.581.0003 89.582.0003 89.583.0003 89.584.0003	PL 16 PL 25 PL 32 PL 40	组装套件 225/: 1只带衬垫滑块 1只铰接式载体 1只螺栓	Load mounting 225/1 225/2 225/3 225/4	89.581.0003 89.582.0003 89.583.0003 89.584.0003	PL 16 PL 25 PL 32 PL 40	Connection Set 225/.: 1 Load friction with liner 1 articulated carrier 1 bolt
T型托架 226/3 226/4 227/3 227/4	89.583.0008 89.584.0008 89.583.0009 89.584.0009	PL 32 PL 40 PL 32 PL 40	组装套件 226/: 标准型 T 型负载支架 组装套件 227/: 加长型 T 型负载支架	Load mounting 226/3 226/4 227/3 227/4	89.583.0008 89.584.0008 89.583.0009 89.584.0009	PL 32 PL 40 PL 32 PL 40	Connection Set 226/.: 1 T-mounting SHORT Connection Set 227/.: 1 T-mounting LONG

型号	定购码	气缸-ø	描述	Types	Ident.-N0.	Zyl. -ø	Description
G型活动中部支撑座 25/G1.0 25/G2.0 25/G3.0	89.581.9003 89.582.9003 89.583.9003	PL 16 PL 25 PL 32	颜色：本色 材质：阳极氧化铝合金	G- Mobile Mid Section Support 25/G1.0 25/G2.0 25/G3.0	89.581.9003 89.582.9003 89.583.9003	PL 16 PL 25 PL 32	Colour: natur Material: AL
W型活动中部支撑座 25/W1.0 25/W2.0 25/W3.0	89.581.9002 89.582.9002 89.583.9002	PL 16 PL 25 PL 32	颜色：本色 材质：阳极氧化铝合金	W- Mobile Mid Section Support 25/W1.0 25/W2.0 25/W3.0	89.581.9002 89.582.9002 89.583.9002	PL 16 PL 25 PL 32	Colour: natur Material: AL

PLF-SERIE

PLF 系列

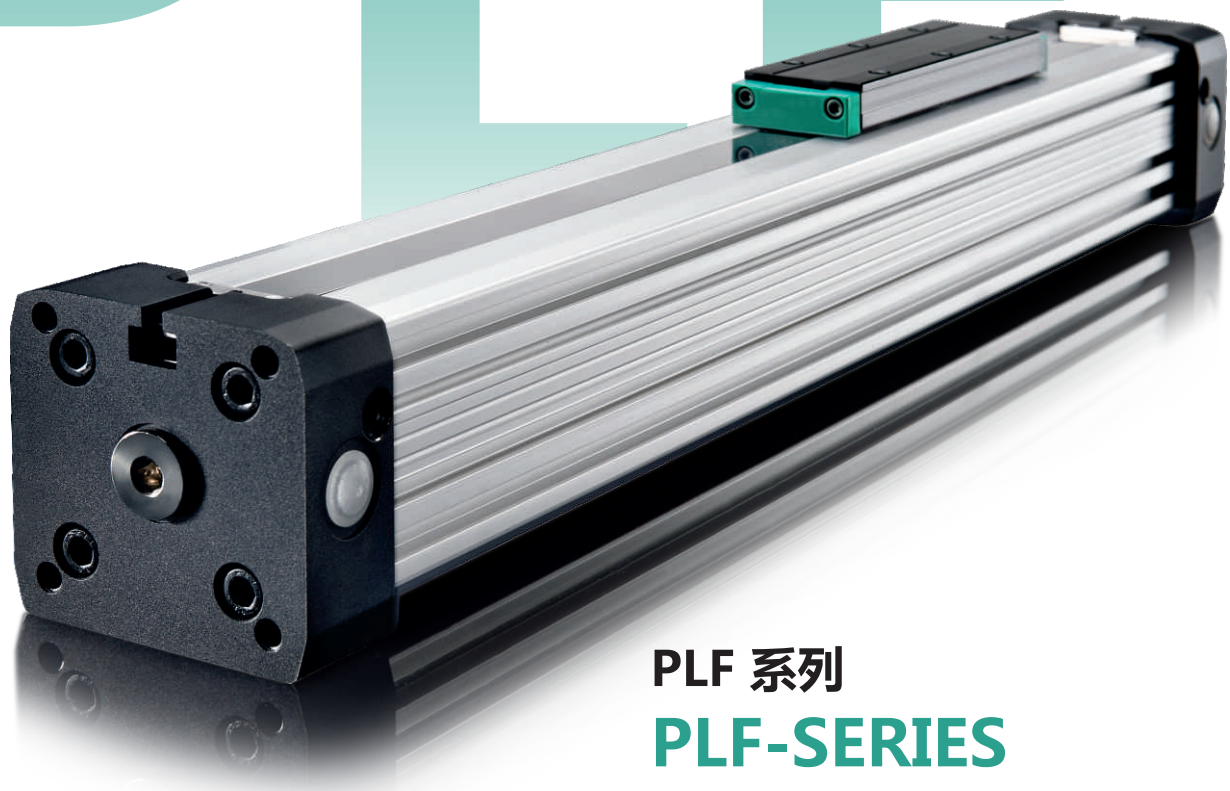

PLF 系列

PLF-SERIES

THE FLAT

滑块运动的沟槽于轴向贯通整个缸筒，气缸作用力由与活塞成一体的滑块来传递。

推力传递原理如下：
压缩空气推动内部活塞侧面，带动外部滑块做对应方向运动。

气缸内部的沟槽位置由极其光滑的精磨不锈钢带来保证密封，沟槽两侧的磁条保证了内钢带始终处于同一个位置不变。外钢带与防尘刷系统可以防止灰尘进入气缸内部。

活塞与滑块内部具有独特的导向槽，当滑块运动或静止时，内外钢带在活塞内部是分离的，外钢带被拉高，内钢带则低于滑块，而活塞两侧的内外钢带很牢固地附着在沟槽两侧。

The entire tube is slotted throughout its full length. The force is transmitted through the load friction, which is attached to the piston axle. The design of the piston axle is that way that the inner part of the piston axle is connected through the slot with the outer part of it. Therefore the force transmission runs as follows:

Air pressure > Piston area > piston axle (inner part) > piston axle (outer part) > load friction > load.

The sealing of the cylinder slot is garanteed by a most precisely grinded inner steel band. The inner band is kept in position due to magnet stripes which are placed on both sides of the slot. In addition there is an outer steel band covering the slot in order to keep dust out of inner space of the cylinder.

During piston movement as well as during stillstand of it both steelbands are lifted right after the piston seal and led through the piston axle by means of a separate own guiding chanel. Before and behind the piston axle both bands are covering the slot permanently again.

优势 / BENEFITS

- 活塞两端作用力相同
- 作用力传递直接，扭矩安全
- 标准活塞附磁，可订购无磁活塞
- 结构独特，节约50%安装空间
- 可达5700mm长行程
- 端盖具有三个不同方向的供气口及可调气缓冲
- 运行反应快，活塞可高速运动
- 可根据用户要求进行灵活设计
- 无润滑压缩空气供给或润滑压缩空气供给**

可接受特殊订货要求

注意：在将润滑压缩空气供给换成无润滑压缩空气供给之前，气缸必须拆卸清洁，重新加入润滑脂，正确组装后方可。

- Equal forces on both ends of the piston
- Force connection direct, torque safe
- Piston with or without magnets
- 50% space-savings
- Long strokes up to 5700mm
- End caps with 3 air connections and adjustable cushioning
- Fast acceleration and high piston velocity
- Very flexible in the user`s design
- Non lubricated or lubricated air supply**)

*) Special Version On request

**) Attention: Before changing operation from lubricated to nonlubricated air the cylinder has to be disassembled, cleaned, newly greased and reassembled

技术参数 / TECHNICAL DATA

设计	无杆气缸、双动						Design	Rodless cylinder, double acting						
行程							Strokes							
ø 16 mm	100–4400mm, 1mm的增量						ø 16 mm	100–4400mm, in increments of 1mm						
ø 25-63 mm	100–5700mm, 1mm的增量 (可按要求制作更长的行程)						ø 25-63 mm	100–5700mm, in increments of 1mm (longer strokes on request)						
供气口	Ø16	Ø25	Ø32	Ø40	Ø50	Ø63	Air connection	Ø16	Ø25	Ø32	Ø40	Ø50	Ø63	
	M5	G1/8	G1/4	G1/4	G1/4	G3/8		M5	G1/8	G1/4	G1/4	G1/4	G3/8	
安装位置	自由安装						Mounting	free						
力 + 力矩	见负载，作用力和力矩图表						Forces + moments	see Forces and moments						
支撑力	见中部支撑图表						Support Forces	see Deflection Diagram						
缓冲长度	见缓冲图表						Cushion Length	see Cushion Diagram						
温度	–10°C ~ +80°C（其他温度范围可定制）						Temperatures	–10°C ~ +80°C (other temperatures on request)						
压力范围	0,5–8,0 bar						Pressure range	0,5–8,0 bar						
介质	压缩空气，过滤最大50微米						Medium	compressed air, filtered max. 50µm						
材料							Materials							
缸筒	高强度阳极氧化铝合金						Barrel	High-strength anodized aluminum						
端盖	高强度阳极氧化铝合金						End caps	High-strength anodized aluminum						
活塞轴	高强度阳极氧化铝合金						Piston axle	High-strength anodized aluminum						
密封件	耐油合成材料（NBR：v < 1m/s，VITON 可选：v ≥ 1m/s）						Seals	Oilproof synthetic material (NBR: v< 1m/s , VITON: v ≥ 1m/s)						
密封带	不锈钢						Sealing bands	Stainless steel						
活塞	耐磨合成材料						Piston caps	Wear proof synthetic material						
滑动件	耐磨合成材料						Sliding parts	Wear proof synthetic material						

气缸外形尺寸 / CYLINDER DIMENSIONS

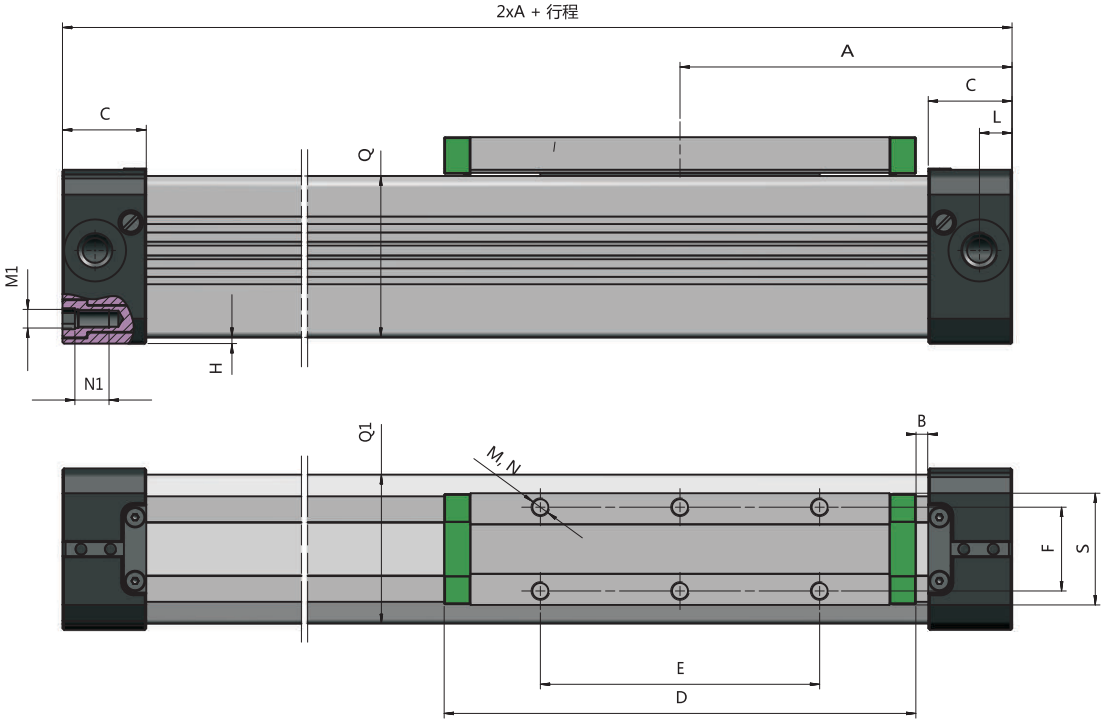

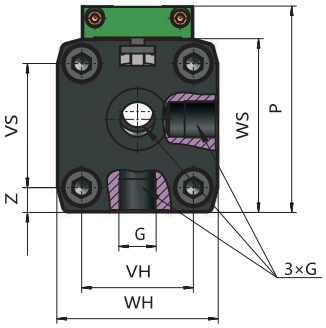

Ø16, 25, 32

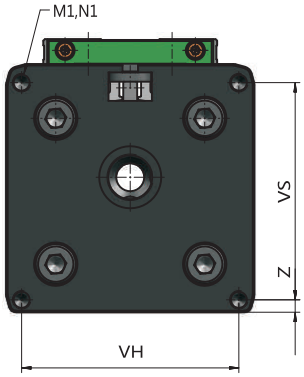

Ø40, 50, 63

ø	A	B	C	D	E	F	G	H	L	M	M1	N	N1	P
16	65	15,5	15	69	36	16,5	M5	1,0	5,5	M4	M3	7	7,0	36,5
25	100	21,0	23	111	65	25,0	G1/8'	2,0	8,5	M5	M5	10	12	52,5
32	125	22,0	27	152	90	27,0	G1/4'	2,0	10,5	M6	M6	7	14	66,5
40	150	44,0	30	152	90	27,0	G1/4'	6,75	15,0	M6	M6	10	17	80,0
50	175	42,0	33,0	200	110	27,0	G1/4'	0,5	11,7	M6	M6	6	18	88,0
63	215	47,5	50	235	155	36,0	G3/8'	1,5	25,0	M8	M8	15	18	123,0

ø	QxQ1	S	VS	VH	WS	WH	Z
16	24,5x25	22,0	18	18	27	27	4,5
25	36x36	33,0	27	27	40	40	6,5
32	52x51	36,0	40	36	56	52	8,0
40	58,5x59	36,4	54	54	69	72	9,0
50	77x78	56,0	70	70	80	80	4,0
63	102x102	50,0	78	78	106	106	14,5

负载，作用力和力矩 / FORCES AND MOMENTS

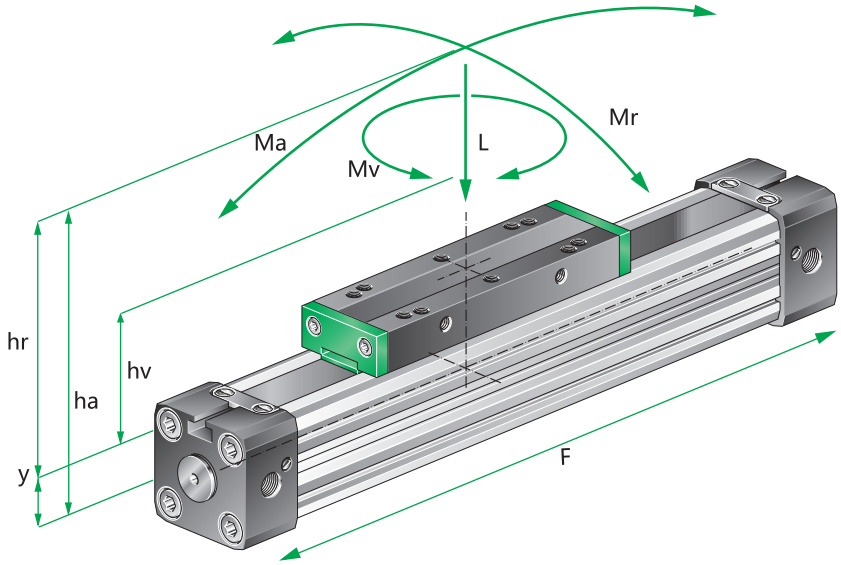

公式 /

FORMELN

$M_a = F * h_a$

$M_r = F * h_r$

$M_v = F * h_v$

气缸		有效作用力 (N)	缓冲长度	最大允许 负载(N)	最大允许 弯曲力矩(Nm)		最大允许 扭矩(Nm)
		at 6 Bar	(mm)	PLF	PLF		PLF
Ø	Y	F	S	L	Ma 轴向	Mr 径向	Mv 中心
16	9	110	15	120	4	0,3	0,5
25	14	250	21	300	15	1	3,0
32	18	420	26	450	30	2	4,5
40	22	640	32	750	60	4	8,0
50	28	1000	32	1200	115	7	15,0
63	36	1550	40	1650	200	8	24,0

Cylinder		Effect Force (N)	Cushioning	Max. allowed load (N)	Max. allowed bending moments (Nm)		Max. allowed torque (Nm)
		at 6 Bar	(mm)	PLF	PLF		PLF
Ø	Y	F	S	L	Ma axial	Mr radial	Mv zentral
16	9	110	15	120	4	0,3	0,5
25	14	250	21	300	15	1	3,0
32	18	420	26	450	30	2	4,5
40	22	640	32	750	60	4	8,0
50	28	1000	32	1200	115	7	15,0
63	36	1550	40	1650	200	8	24,0

以上数据显示了在轻负载，无震动操作时的最大值，即使在动态情况下，也不应该超出此值。
负荷与力矩数据以最大压力6bar，速度V≤0.2m/sec（PL系列），速度V≤0.45m/sec（PLF系列）为基准。

注意：当气缸作用力时，应该考虑到不同负载和应用所产生的摩擦力，鉴于一些不确定的使用场合，以上数值应减少10-20%。

我们将乐于在特殊应用方面给您一些建议。

The figures above are max. values based on light shock free duty and speed of v≤ 0,2m/sec [PL-series] – v ≤ 0,45m/sec [PLF-series]. Max. pressure 6 bar.

An exceeding of the values in dynamic operations, even for short moments, has to be avoided.

Attention: Resulting forces could lead to extreme exceedings of the values. In case of undefinable situations the above max. values have to be reduced by 10–20%.

缓冲图表 / CUSHIONING DIAGRAM

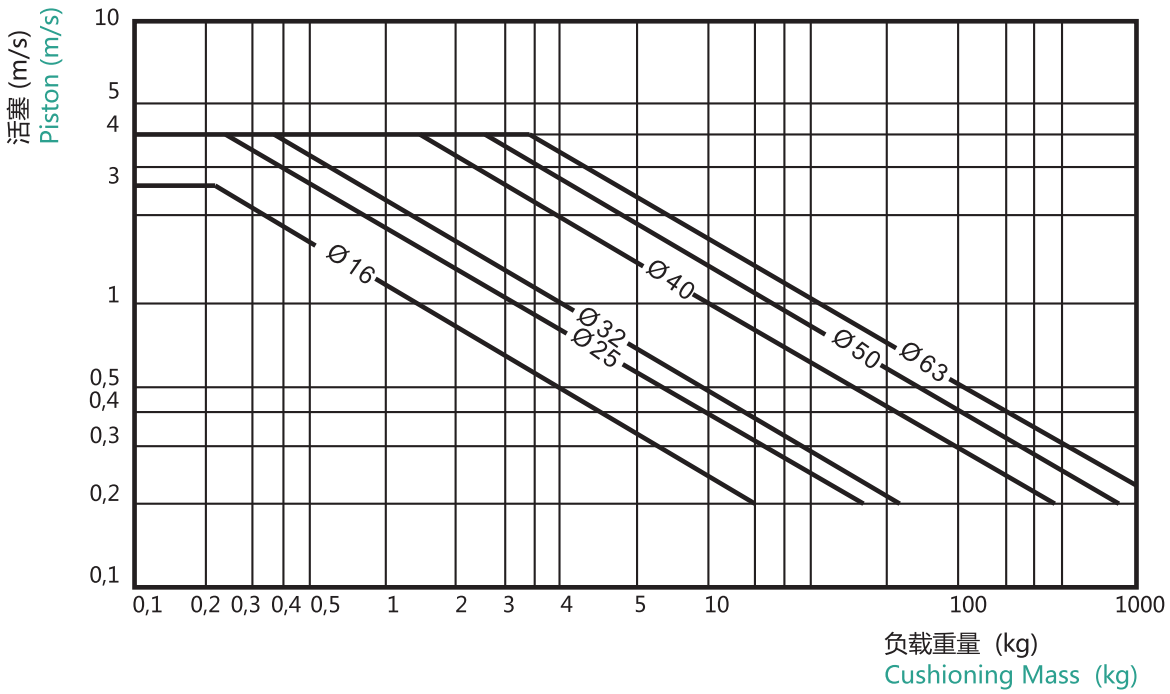

请注意以下事项:

- 如果超出以上图标允许范围，必须安装附加的缓冲器。
- 当活塞运动速度大于1m/sec，则建议使用VITON密封圈。
- 当活塞速度V≤0.1m/sec（NBR），V≤0.2m/sec（VITON），需要更换成低速润滑油脂。
- 密封件最长使用寿命是基于活塞运动速度V≤1m/sec。

Pay attention to the following points:

- If the limits above are exceeded additional shock absorbers are necessary.
- For piston speeds of more than ≥ 1m/s viton seals are recommended.
- For piston speeds ≤ 0,1m/s (NBR), ≤ 0,2m/s (VITON) slow speed lubrication is necessary see at sperpart kids
- Maximum duration life will be achieved when piston speeds do not exceed 1m/s.

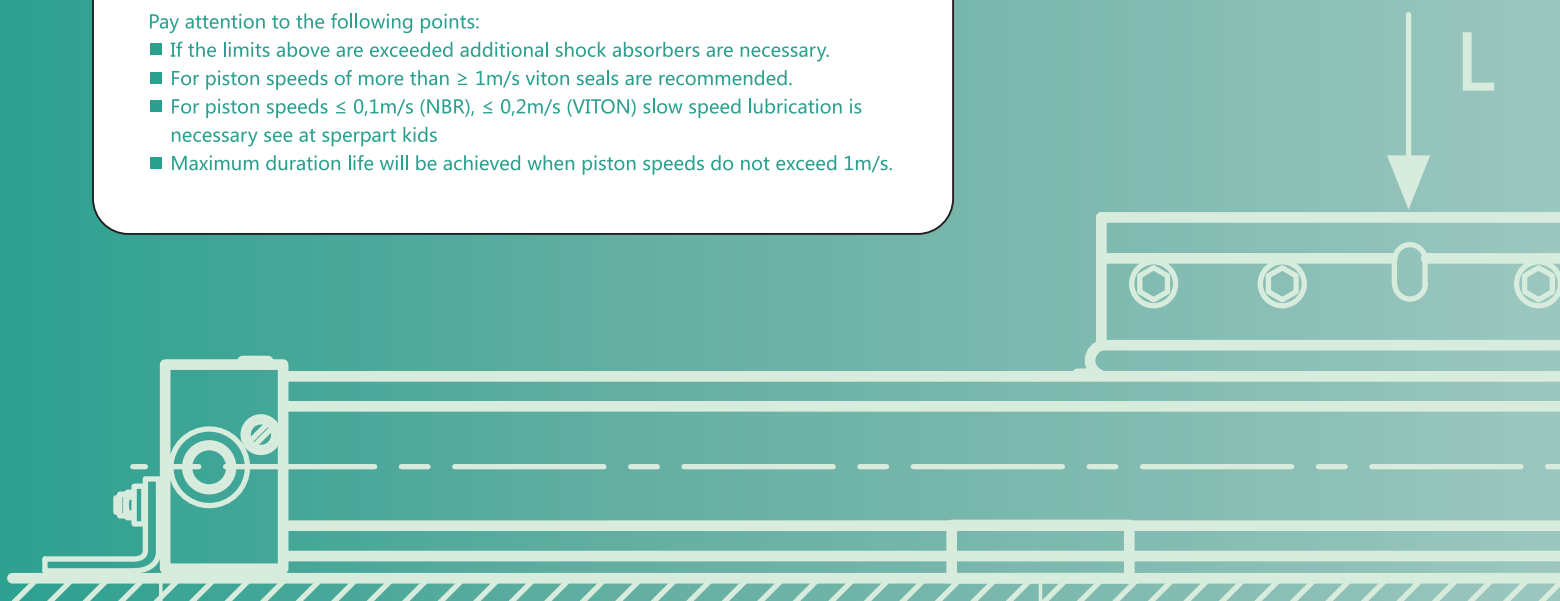

偏差图表 / DEFLECTION DIAGRAM

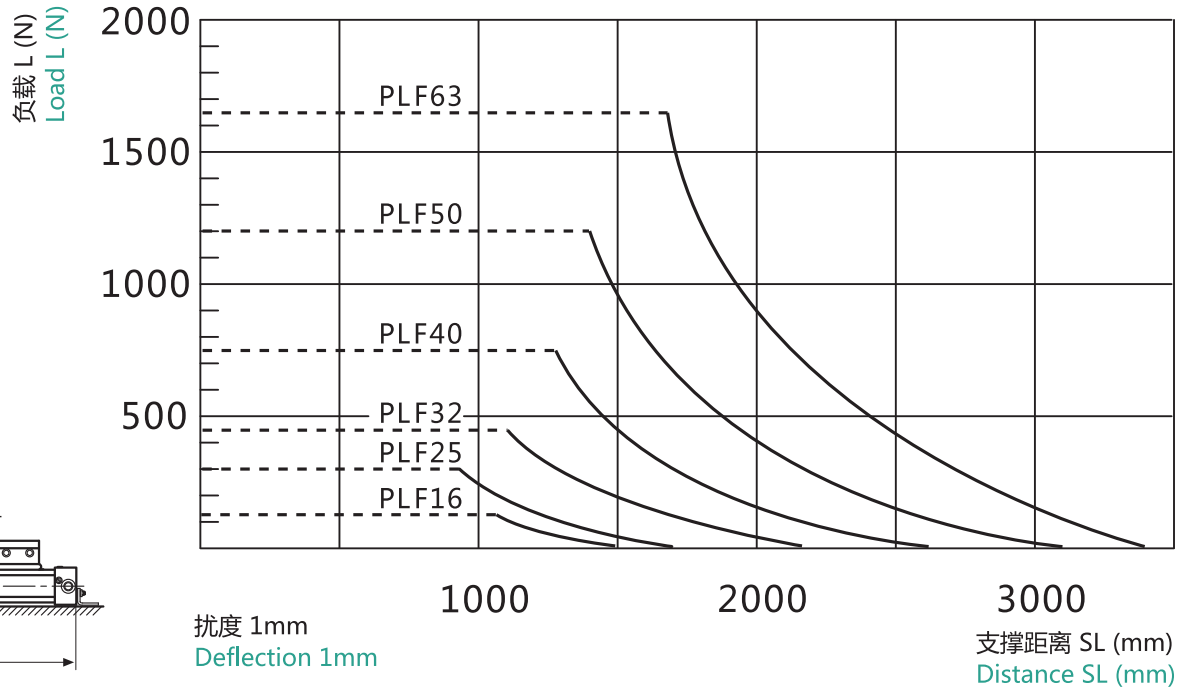

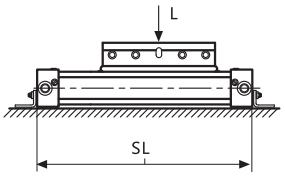

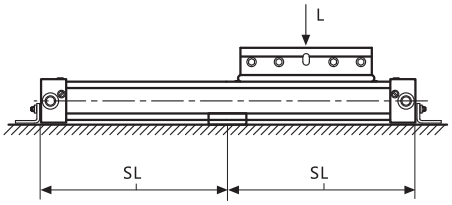

若小于最大支撑距离 SL (mm)，则无需中部支撑配件（No. 25)
max. distance SL (mm)- free of mounting (No. 25)

中部支撑相关信息：
- 在图表最大负载（L）的作用下，支撑之间气缸产生0.5-1mm的扰度是允许的。
- 在图表最大负载（L）的作用下，支撑之间气缸产生1-1.5mm的扰度，则必须增加中部支撑配件。

Diagram Information:
- Calculated deflections without support of 0,5 – 1mm allow exceeding of supporting distance.
- Calculated deflections without support of 1mm – max 1,5mm require reduction of the supporting distance.

安装配件尺寸 / MOUNTINGS DIMENSIONS

端盖支架（脚架）/ End cover bracket (foot)

24/1.0 - 2.0*

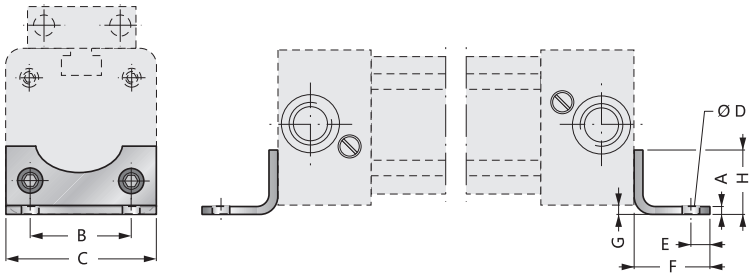

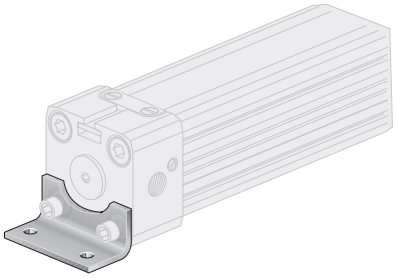

24/3.0 - 6.0*

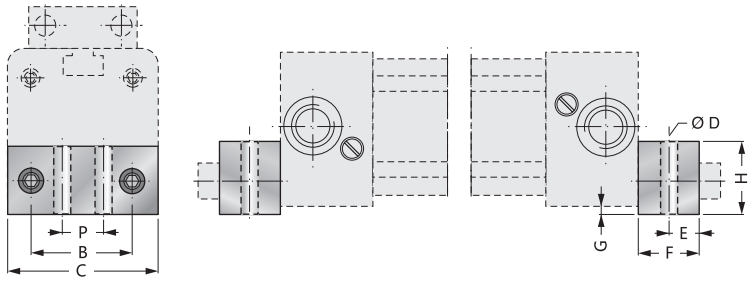

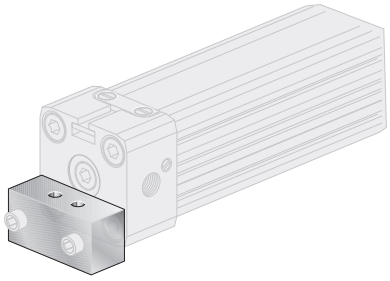

中部支撑座 / Mid section support

25/1.0 - 2.0*

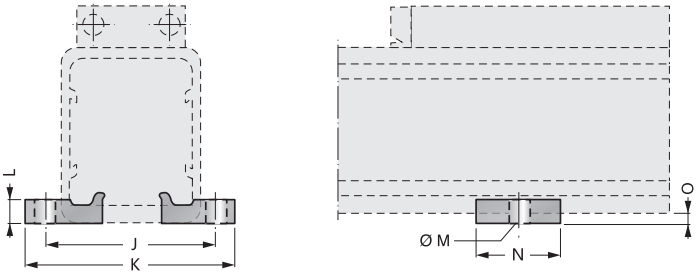

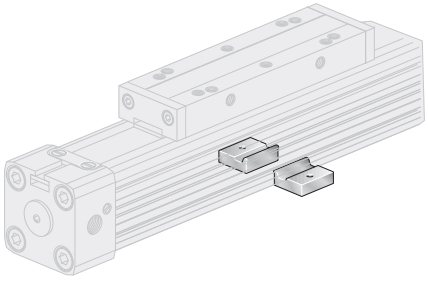

25/3.0 - 4.0*

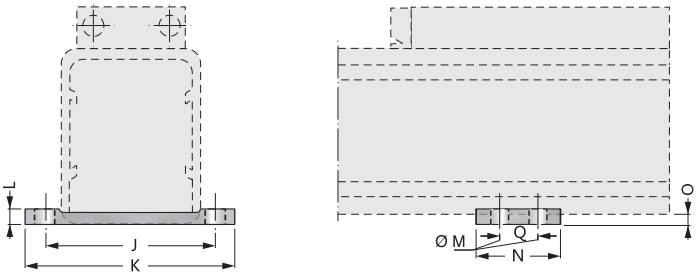

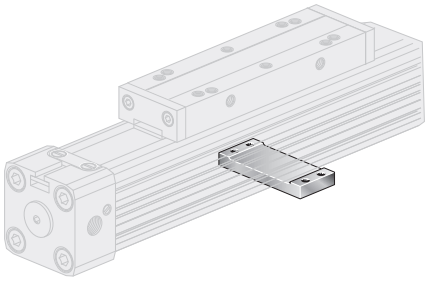

25/5.0 - 6.0*

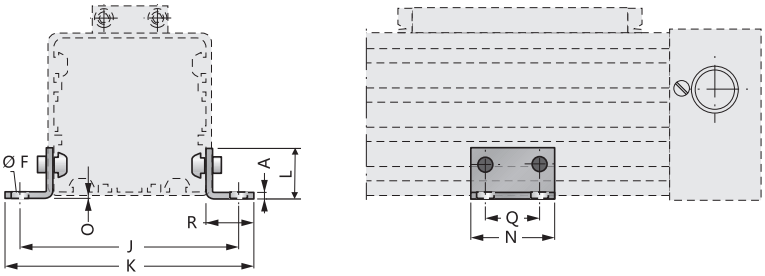

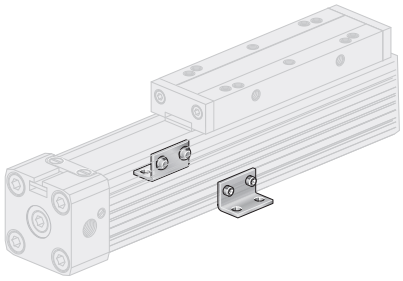

安装配件尺寸 / MOUNTINGS DIMENSIONS

ø	A	B	C	D	E	F	G	H	J	K	L	M	N	O	P	Q
16	1,6	18	26	3,6	4,0	14	1,5	12,5	41	53,5	5	ø5,5	20	3	-	-
25	2,5	27	40	5,5	6,0	22	2	18	48	60	6	ø5,5	20	4	-	-
32	-	36	51	6,6	8,0	24	4	20	61	73	10	ø6,5	55	6	20	40
40	-	54	71	9	11,5	24	2	20	70	85	10	ø6,5	60	7,2	30	45

ø	A	B	C	D	E	F	G	H	J	K	L	M	N	O	P	Q
50	5	70	80	9	12,5	25	2,0	25	120	146	35	6,6	45	3,5	45	30
63	5	78	105	11	15	30	2,5	40	147	147	35	6,6	45	4	48	30

G型活动中部支撑座，用于气缸Ø16, 25, 32

Mobile Mid Section Support, Type G for Cylinder Ø16, 25, 32

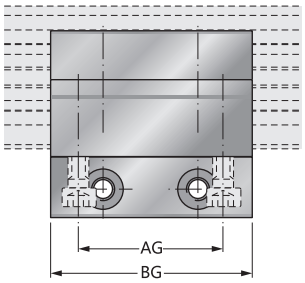

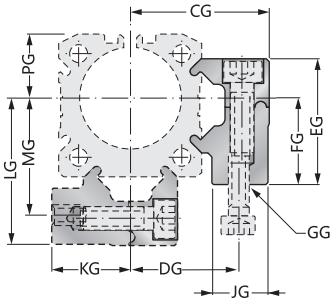

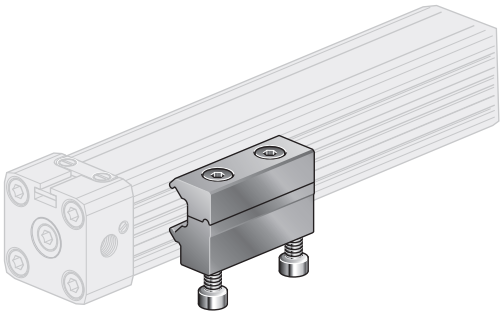

ø	AG	BG	CG	DG	EG	FG	GG	JG	KG	LG	MG	PG
16	18,0	30,0	27,5	18,4	21,0	15,0	M4	11,5	13,9	29,0	19,7	10,8
25	36,0	50,0	34,5	27,0	31,3	22,0	M5	14,0	20,0	36,5	29,0	16,0
32	36,0	50,0	40,6	33,0	39,0	30,0	M6	14,0	27,6	47,0	39,5	21,5

W型活动中部支撑座，用于气缸Ø16, 25, 32

Mobile Mid Section Support, Type W for Cylinder Ø16, 25, 32

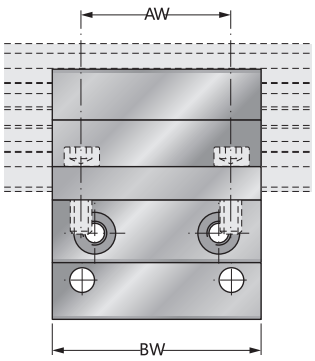

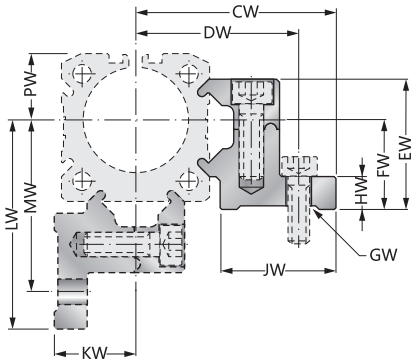

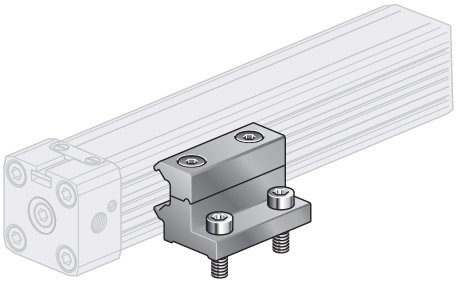

ø	AW	BW	CW	DW	EW	FW	GW	HW	JW	KW	LW	MW	PW
16	18,0	30,0	37,0	32,5	21,0	15,0	ø4,5	6,0	22,4	13,9	38,0	32,9	10,8
25	36,0	50,0	47,5	40,0	31,3	22,0	ø5,5	10,0	26,0	20,0	49,5	42,0	16,0
32	36,0	50,0	54,6	46,0	39,0	30,0	ø6,5	10,0	28,5	27,6	61,0	52,5	21,5

安装配件尺寸 / MOUNTINGS DIMENSIONS

浮动式托架 / Articulated carrier

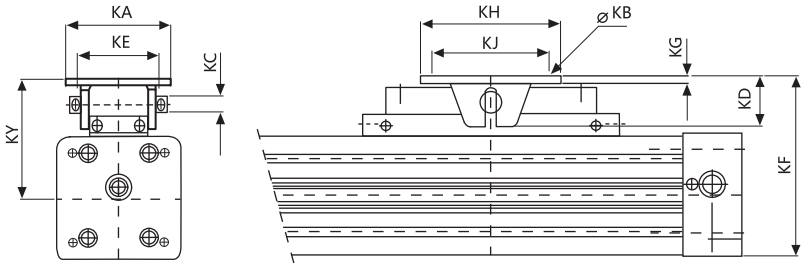

ø	KA	KB	KD	KE	KF	KG	KH	KJ	KY
16	26	M4	10	10	46,5-47,5	3,0	28	20	33
25	38	M5	19	16	71,5-73,5	3,5	40	30	51,5
32	62	M6	28	25	94,5-96,5	6,0	60	46	66,5
40	62	M6	28	25	108-110	6,0	60	46	73,5
50	90	9	43,7	70	135-150	6,4	120	100	95-110
63	90	9	43,7	70	155-170	6,4	120	100	102-117

气缸 PLF / CYLINDER PLF

• • • • 行程尺寸 (0100-5700 mm)
• • • • Ident-figures for stroke definition (0100-5700 mm)

ø 16-63mm - PLF 16-63/00-22

型号	定购码	描述	Types	Ident.-N0.	Description
PLF 16/00 PLF 25/00 PLF 32/00 PLF 40/00 PLF 50/00 PLF 63/00	11.677. • • • • 12.577. • • • • 13.177. • • • • 14.177. • • • • 15.077. • • • • 16.377. • • • •	标准 00: 标准负载连接 v=1 m/s 丁腈橡胶密封件 10.9 镀锌螺丝 3 向供气口	PLF 16/00 PLF 25/00 PLF 32/00 PLF 40/00 PLF 50/00 PLF 63/00	11.677. • • • • 12.577. • • • • 13.177. • • • • 14.177. • • • • 15.077. • • • • 16.377. • • • •	Standard 00: Rigid load connection v=1 m/s NBR-seals screw 10.9 zinc plated 3-air connections
PLF 16/01 PLF 25/01 PLF 32/01 PLF 40/01 PLF 50/01 PLF 63/01	11.676. • • • • 12.576. • • • • 13.176. • • • • 14.176. • • • • 15.076. • • • • 16.376. • • • •	标准 01: 标准负载连接 v=1 m/s 丁腈橡胶密封件 不锈钢螺丝 3 向供气口	PLF 16/01 PLF 25/01 PLF 32/01 PLF 40/01 PLF 50/01 PLF 63/01	11.676. • • • • 12.576. • • • • 13.176. • • • • 14.176. • • • • 15.076. • • • • 16.376. • • • •	Special 01: Rigid load connection v=1 m/s NBR-seals screw NIROSTA 3-air connections
PLF 16/02 PLF 25/02 PLF 32/02 PLF 40/02 PLF 50/02 PLF 63/02	11.675. • • • • 12.575. • • • • 13.175. • • • • 14.175. • • • • 15.075. • • • • 16.375. • • • •	标准 02: 标准负载连接 v=1 m/s 氟橡胶密封件 10.9 镀锌螺丝 3 向供气口	PLF 16/02 PLF 25/02 PLF 32/02 PLF 40/02 PLF 50/02 PLF 63/02	11.675. • • • • 12.575. • • • • 13.175. • • • • 14.175. • • • • 15.075. • • • • 16.375. • • • •	Special 02: Rigid load connection v=1 m/s VITON-seals screw 10.9 zink platedt 3-air connections
PLF 16/03 PLF 25/03 PLF 32/03 PLF 40/03 PLF 50/03 PLF 63/03	11.674. • • • • 12.574. • • • • 13.174. • • • • 14.174. • • • • 15.074. • • • • 16.374. • • • •	标准 03: 标准负载连接 v=1 m/s 氟橡胶密封件 不锈钢螺丝 3 向供气口	PLF 16/03 PLF 25/03 PLF 32/03 PLF 40/03 PLF 50/03 PLF 63/03	11.674. • • • • 12.574. • • • • 13.174. • • • • 14.174. • • • • 15.074. • • • • 16.374. • • • •	Special 03: Rigid load connection v=1 m/s VITON -seals screw NIROSTA 3-air connections
PLF 32/04 PLF 40/04 PLF 50/04 PLF 63/04	13.184. • • • • 14.184. • • • • 15.084. • • • • 16.384. • • • •	标准 04: 标准负载连接 v=1 m/s 丁腈橡胶密封件 10.9 镀锌螺丝 单边供气	PLF 32/04 PLF 40/04 PLF 50/04 PLF 63/04	13.184. • • • • 14.184. • • • • 15.084. • • • • 16.384. • • • •	Standard 04 Air supply from one side
PLF 16/20 PLF 25/20 PLF 32/20 PLF 40/20 PLF 50/20 PLF 63/20	11.671. • • • • 12.571. • • • • 13.171. • • • • 14.171. • • • • 15.071. • • • • 16.371. • • • •	标准 20: 浮动式托架负载连接 v=1 m/s 丁腈橡胶密封件 10.9 镀锌螺丝 3 向供气口	PLF 16/20 PLF 25/20 PLF 32/20 PLF 40/20 PLF 50/20 PLF 63/20	11.671. • • • • 12.571. • • • • 13.171. • • • • 14.171. • • • • 15.071. • • • • 16.371. • • • •	Standard 20: flexible load connection v=1 m/s NBR-seals screw 10.9 zinc plated 3-air connections
PLF 16/22 PLF 25/22 PLF 32/22 PLF 40/22 PLF 50/22 PLF 63/22	11.673. • • • • 12.573. • • • • 13.173. • • • • 14.173. • • • • 15.073. • • • • 16.373. • • • •	标准 22: 浮动式托架负载连接 v=1 m/s 氟橡胶密封件 10.9 镀锌螺丝 3 向供气口	PLF 16/22 PLF 25/22 PLF 32/22 PLF 40/22 PLF 50/22 PLF 63/22	11.673. • • • • 12.573. • • • • 13.173. • • • • 14.173. • • • • 15.073. • • • • 16.373. • • • •	Special 22: flexible load connection v=1 m/s VITON-seals screw 10.9 zinc plated 3-air connections

安装配件 / CYLINDER MOUNTINGS

型号	定购码	气缸-ø	描述	Types	Ident.-N0.	Zyl. -ø	Description
端盖支架（脚架） 24/1.0 24/2.0 24/3.0 24/4.0 24/5.0 24/6.0	89.581.0001 89.582.0001 89.583.0001 89.584.0001 89.585.0001 89.586.0001	PLF 16 PLF 25 PLF 32 PLF 40 PLF 50 PLF 63	组装套件 24/: 2 只支架 4 只 DIN912 标准的 10.9 镀锌螺丝	Cylinder mounting 24/1.0 24/2.0 24/3.0 24/4.0 24/5.0 24/6.0	89.581.0001 89.582.0001 89.583.0001 89.584.0001 89.585.0001 89.586.0001	PLF 16 PLF 25 PLF 32 PLF 40 PLF 50 PLF 63	Connection set 24/.: 2 brackets 4 screws 10.9 zinc plated acc. DIN 912
24/3.1	89.583.2011	PLF 32	组装套件用于 PL32 直立安装	24/3.1	89.583.2011	PLF 32	Connection set for PL 32 upright
中部支撑座 25/1.0 25/2.0 25/3.0 25/4.0 25/5.0 25/6.0	89.581.0002 89.582.0002 89.583.0012 89.584.0005 89.585.0002 89.586.0002	PLF 16 PLF 25 PLF 32 PLF 40 PLF 50 PLF 63	组装套件 25/: 缸体支架 阳极氧化铝合金	Cylinder mounting Fixation 25/1.0 25/2.0 25/3.0 25/4.0 25/5.0 25/6.0	89.581.0002 89.582.0002 89.583.0012 89.584.0005 89.585.0002 89.586.0002	PLF 16 PLF 25 PLF 32 PLF 40 PLF 50 PLF 63	Connection Set 25/.: body brackets anodised aluminium
浮动式托架 225/1 225/2 225/3 225/4 225/5 225/6	89.581.9953 89.582.9953 89.583.9953 89.584.9953 89.585.9953 89.586.0043	PLF 16 PLF 25 PLF 32 PLF 40 PLF 50 PLF 63	组装套件 225/: 1个带衬垫摩擦负载 1个铰接式载体 1个螺栓	Load mounting 225/1 225/2 225/3 225/4 225/5 225/6	89.581.9953 89.582.9953 89.583.9953 89.584.9953 89.585.9953 89.586.0043	PLF 16 PLF 25 PLF 32 PLF 40 PLF 50 PLF 63	Connection Set 225/.: 1 Load friction with liner 1 articulated carrier 1 bolt

型号	定购码	气缸-ø	描述	Types	Ident.-N0.	Zyl. -ø	Description
G型活动中部支撑座 25/G1.0 25/G2.0 25/G3.0	89.581.9003 89.582.9003 89.583.9003	PLF 16 PLF 25 PLF 32	颜色：本色 材质：阳极氧化铝合金	G- Mobile Mid Section Support 25/G1.0 25/G2.0 25/G3.0	89.581.9003 89.582.9003 89.583.9003	PLF 16 PLF 25 PLF 32	Colour: natur Material: AL
W型活动中部支撑座 25/W1.0 25/W2.0 25/W3.0	89.581.9002 89.582.9002 89.583.9002	PLF 16 PLF 25 PLF 32	颜色：本色 材质：阳极氧化铝合金	W- Mobile Mid Section Support 25/W1.0 25/W2.0 25/W3.0	89.581.9002 89.582.9002 89.583.9002	PLF 16 PLF 25 PLF 32	Colour: natur Material: AL

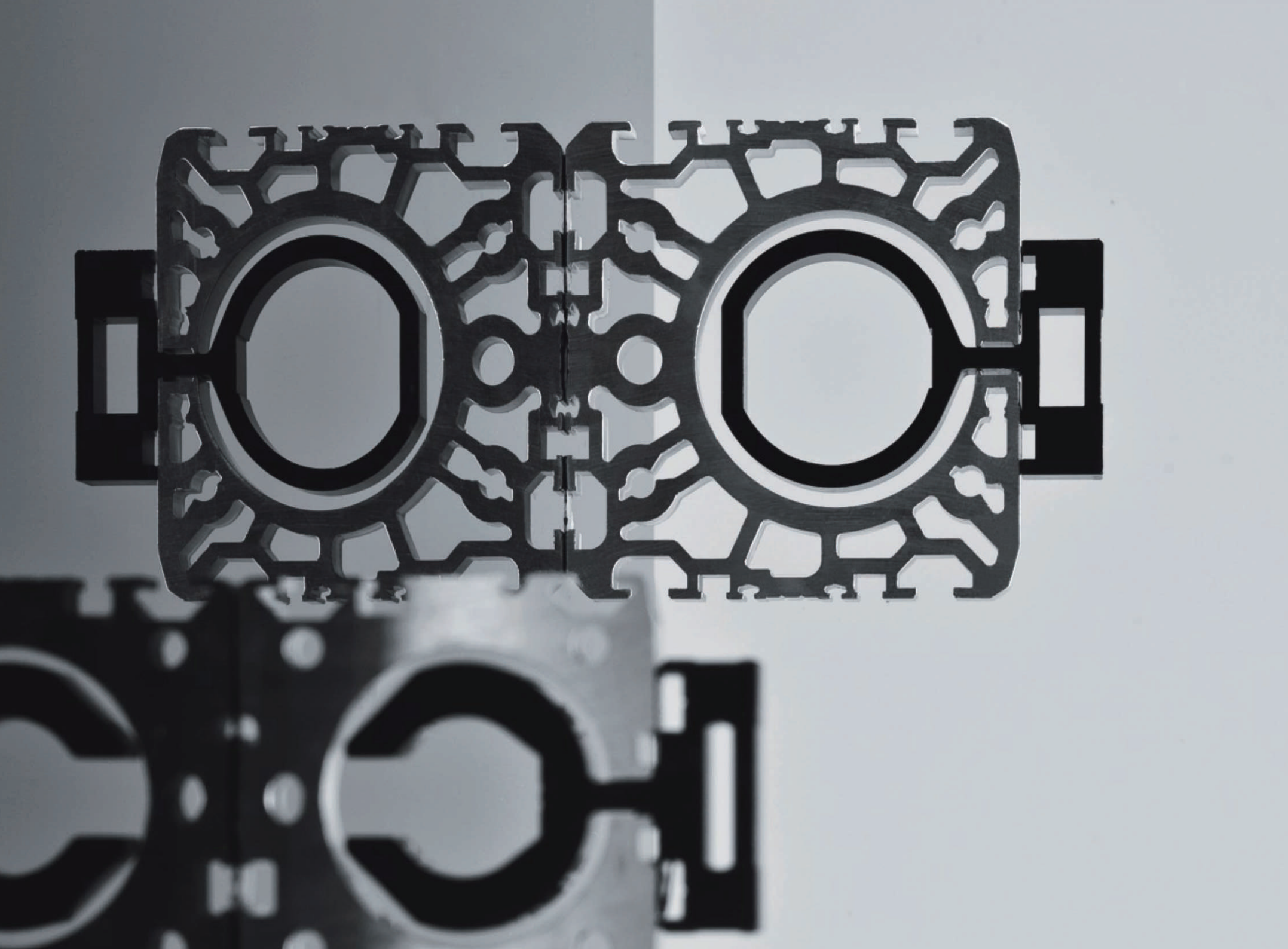

DUO 96 SERIE

DUO 96 系列

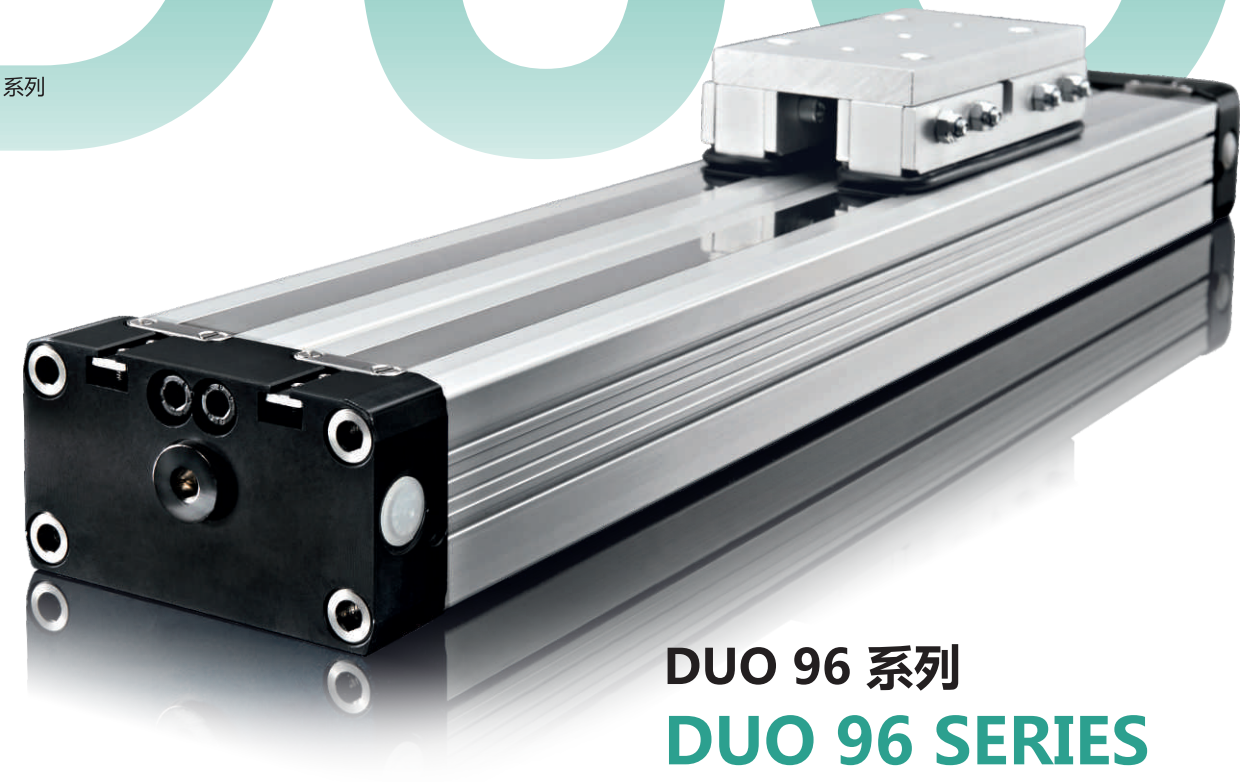

DUO 96 系列

DUO 96 SERIES

THE STRONG

滑块运动的沟槽于轴向贯通整个缸筒，气缸作用力由与活塞成一体的滑块来传递。

推力传递原理如下：
压缩空气推动内部活塞侧面，带动外部滑块做对应方向运动。

气缸内部的沟槽位置由极其光滑的精磨不锈钢带来保证密封，沟槽两侧的磁条保证了内钢带始终处于同一个位置不变。外钢带与防尘刷系统可以防止灰尘进入气缸内部。

活塞与滑块内部具有独特的导向槽，当滑块运动或静止时，内外钢带在活塞内部是分离的，外钢带被拉高，内钢带则低于滑块，而活塞两侧的内外钢带很牢固地附着在沟槽两侧。

The entire tube is slotted throughout its full length. The force is transmitted through the load friction, which is attached to the piston axle.

The design of the piston axle is that way that the inner part of the piston axle is connected through the slot with the outer part of it. Therefore the force transmission runs as follows:

Air pressure Piston area, piston axle (inner part), piston axle (outer part), load friction ,load.

The sealing of the cylinder slot is garanteed by a most precisely grinded inner steel band. The inner band is kept in position due to magnet stripes which are placed on both sides of the slot. In addition there is an outer steel band covering the slot in order to keep dust out of inner space of the cylinder.

During piston movement as well as during stillstand of it both steelbands are lifted right after the piston seal and led through the piston axle by means of a separate own guiding chanel. Before and behind the piston axle both bands are covering the slot permanently again.

优势 / BENEFITS

- 更优越的导向性能
- 双倍的作用力
- 更大的负载
- 活塞两端作用力相同
- 作用力传递直接，扭矩安全
- 标准活塞附磁，可订购无磁活塞
- 结构独特，节约50%安装空间
- 可达5700mm长行程
- 端盖具有三个不同方向的供气口及可调气缓冲
- 运行反应快，活塞可高速运动
- 可根据用户要求进行灵活设计
- 无润滑压缩空气供给或润滑压缩空气供给**

可接受特殊订货要求
注意：在将润滑压缩空气供给换成无润滑压缩空气供给之前，气缸必须拆卸清洁，重新加入润滑脂，正确组装后方可。

- Superior guiding capacity
- Stronger forces
- Higher loads
- Equal forces on both ends of the piston
- Force connection direct, torque safe
- Piston with or without magnets
- 50% space-savings
- Long strokes up to →5700mm
- End caps with 3 air connections and adjustable cushioning
- Fast acceleration and high piston velocity
- Very flexible in the user`s design
- Non lubricated or lubricated air supply**)

*) Special Version On request
**) Attention: Before changing operation from lubricated to nonlubricated air the cylinder has to be disassembled. cleaned, newly greased and reassembled

技术参数 / TECHNICAL DATA

设计	无杆气缸、双动			Design	Rodless cylinder, double acting		
行程				Strokes			
ø 16 mm	100–3300mm, 1mm的增量			ø 16 mm	100–3300mm, in increments of 1mm		
ø 25-32 mm	100–5700mm, 1mm的增量 (可按要求制作更长的行程)			ø 25-32mm	100–5700mm, in increments of 1mm (longer strokes on request)		
供气口	Ø16	Ø25	Ø32	Air connection	Ø16	Ø25	Ø32
	M5	G1/8	G1/4		M5	G1/8	G1/4
安装位置	自由安装			Mounting	free		
力 + 力矩	见负载，作用力和力矩图表			Forces + moments	see Forces and moments		
支撑力	见中部支撑图表			Support Forces	see Deflection Diagram		
缓冲长度	见缓冲图表			Cushion Length	see Cushion Diagram		
温度	–10°C ~ +80°C (其他温度范围可定制)			Temperatures	–10°C ~ +80°C (other temperatures on request)		
压力范围	0,5–8,0 bar			Pressure range	0,5–8,0 bar		
介质	压缩空气，过滤最大50微米			Medium	compressed air, filtered max. 50µm		
材料				Materials			
缸筒	高强度阳极氧化铝合金			Barrel	High-strength anodized aluminum		
端盖	高强度阳极氧化铝合金			End caps	High-strength anodized aluminum		
活塞轴	高强度阳极氧化铝合金			Piston axle	High-strength anodized aluminum		
密封件	耐油合成材料 (NBR：v < 1m/s，VITON 可选：v ≥ 1m/s)			Seals	Oilproof synthetic material (NBR: v< 1m/s , VITON: v ≥ 1m/s)		
密封带	不锈钢			Sealing bands	Stainless steel		
活塞	耐磨合成材料			Piston caps	Wear proof synthetic material		
滑动件	耐磨合成材料			Sliding parts	Wear proof synthetic material		

气缸外形尺寸 / CYLINDER DIMENSIONS

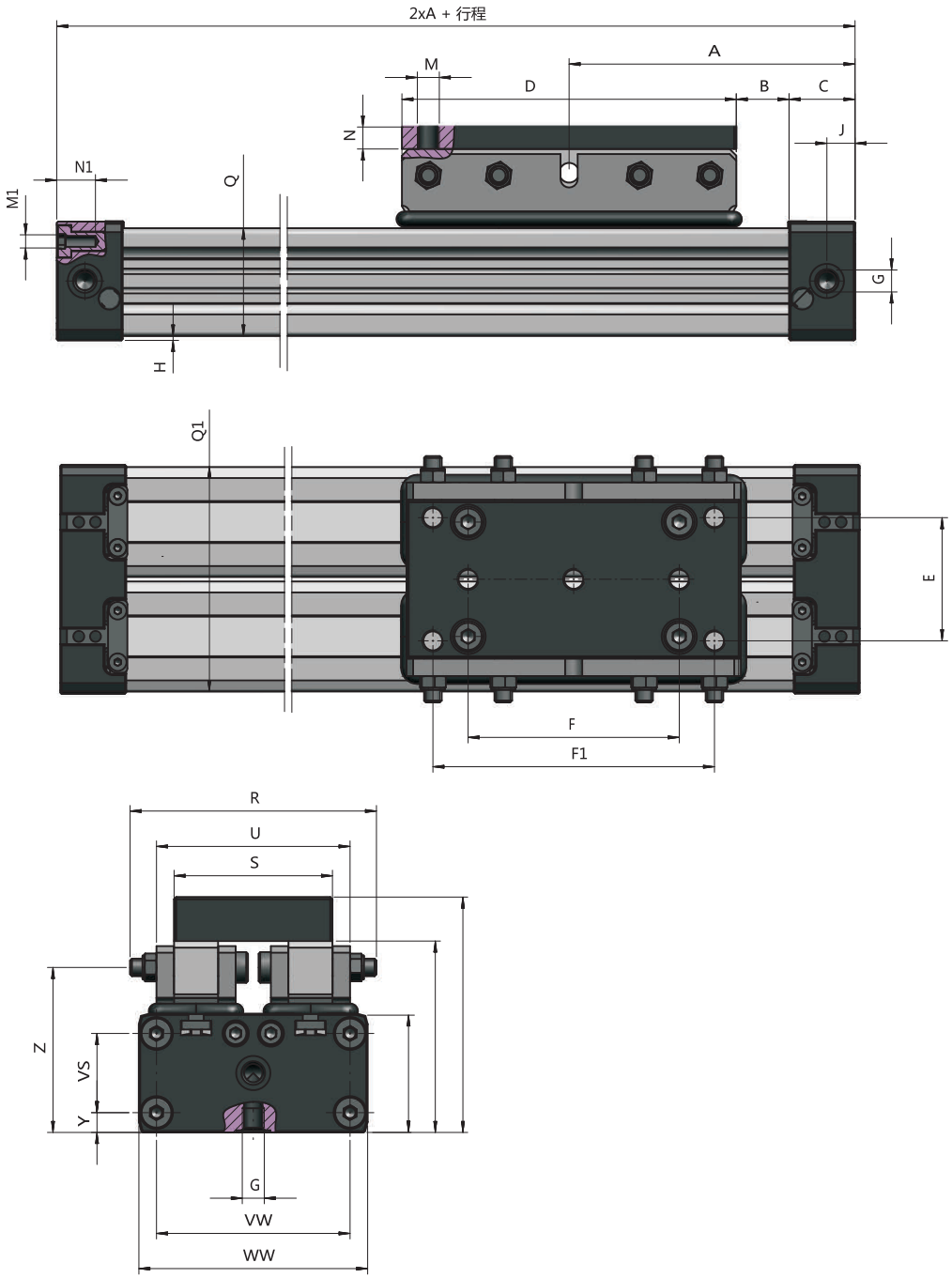

ø	A	B	C	D	E	F	F1	G	H	J	M	N	M1	N1
2x16	65	12	15	76	—	—	48	M5	1,5	5,5	M5	10,0	M3	7
2x25	100	17	23	120	32,4	80	100	G1/8'	2	8,5	M6	15,0	M5	10
2x32	125	23	27	150	40,4	90	120	G1/4'	2	10,5	M8	12,0	M6	14

ø	P	P1	QxQ1	R	S	U	VW	VS	WW	WS	Y	Z
2x16	53,5	42,3	24x48	56	34	42	42	18	51	27	4,5	37,5
2x25	74,0	58,5	36x72	74	50	59	63	27	72	41	7,0	53,5
2x32	94,0	82	52x96	90	70	75	84	40	98	56	8,0	74,0

力和力矩 / FORCES AND MOMENTS

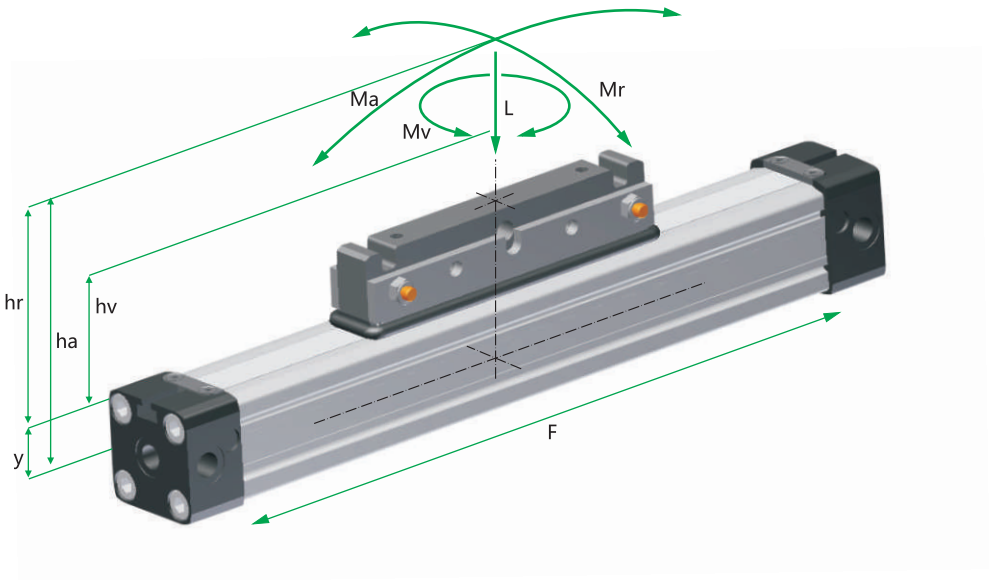

公式 /

FORMELN

$M_a = F * h_a$

$M_r = F * h_r$

$M_v = F * h_v$

气缸	有效作用力 (N)	缓冲长度	最大允许 负载(N)	最大允许 弯曲力矩(Nm)		最大允许 扭矩(Nm)
	at 6 Bar	(mm)	DUO	DUO		DUO
Ø	F	S	L	Ma 轴向	Mr 径向	Mv 中心
2x16	200	15	240	8,0	2,4	1,0
2x25	480	21	600	30,0	8,0	6,0
2x32	820	26	900	60,0	16,5	10,0

Cylinder	Effect Force (N)	Cushioning	Max. allowed load (N)	Max. allowed bending moments (Nm)		Max. allowed torque (Nm)
	at 6 Bar	(mm)	DUO	DUO		DUO
Ø	F	S	L	Ma axial	Mr radial	Mv zentral
2x16	200	15	240	8,0	2,4	1,0
2x25	480	21	600	30,0	8,0	6,0
2x32	820	26	900	60,0	16,5	10,0

以上数据显示了在轻负载，无震动操作时的最大值，即使在动态情况下，也不应该超出此值。
负荷与力矩数据以最大压力6bar，速度V≤0.2m/sec（PL系列），速度V≤0.45m/sec（PLF系列）为基准。

注意：当气缸作用力时，应该考虑到不同负载和应用所产生的摩擦力，鉴于一些不确定的使用场合，以上数值应减少10-20%。

我们将乐于在特殊应用方面给您一些建议。

The figures above are max. values based on light shock free duty and speed of v≤ 0,2m/sec [PL-series] – v ≤ 0,45m/sec [PLF-series]. Max. pressure 6 bar.
An exceeding of the values in dynamic operations, even for short moments, has to be avoided.

Attention: Resulting forces could lead to extreme exceedings of the values. In case of undefinable situations the above max. values have to be reduced by 10–20%.

Please ask our sales representatives

缓冲图表 / CUSHIONING DIAGRAM

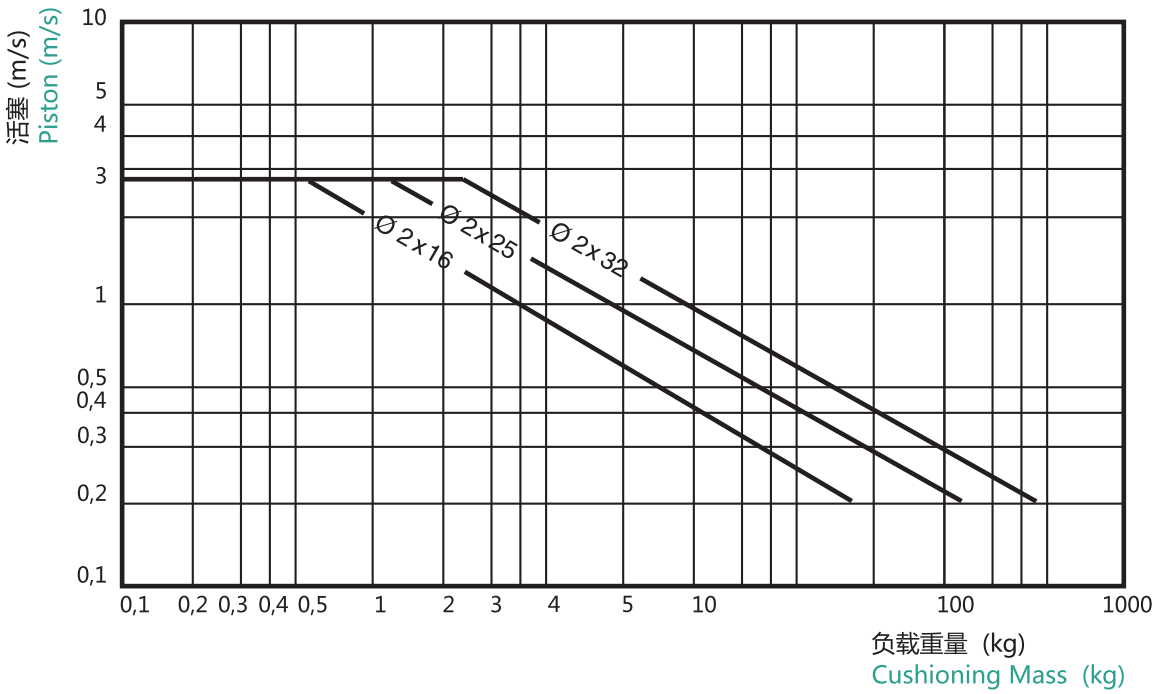

请注意以下事项:

- 如果超出以上图标允许范围，必须安装附加的缓冲器。
- 当活塞运动速度大于1m/sec，则建议使用VITON密封圈。
- 当活塞速度V≤0.1m/sec（NBR），V≤0.2m/sec（VITON），需要更换成低速润滑油脂。
- 密封件最长使用寿命是基于活塞运动速度V≤1m/sec。

Pay attention to the following points:

- If the limits above are exceeded additional shock absorbers are necessary.
- For piston speeds of more than ≥ 1m/s viton seals are recommended.
- For piston speeds ≤ 0,1m/s (NBR), ≤ 0,2m/s (VITON) slow speed lubrication is necessary see at sperpart kids
- Maximum duration life will be achieved when piston speeds do not exceed 1m/s.

安装配件尺寸 / MOUNTINGS DIMENSIONS

端盖支架（底座）/ End cover bracket (foot)

24/1.0 - 2.0

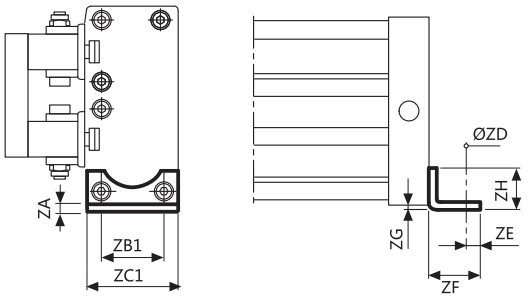

24/1.2 - 2.2

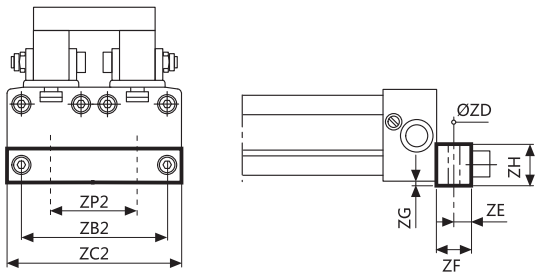

24/3.1

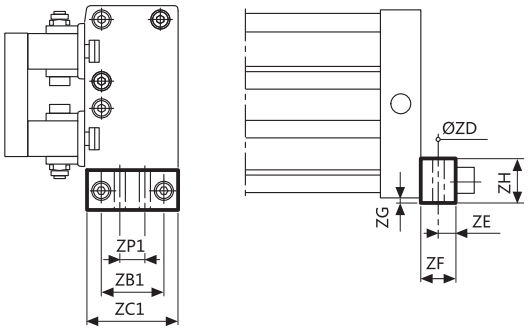

24/3.2

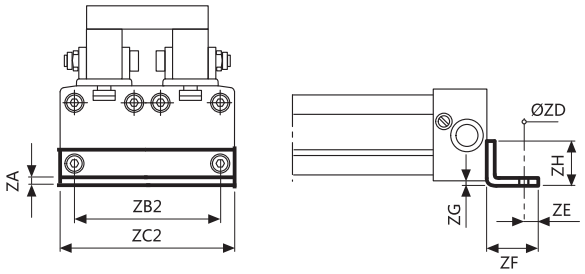

中部支撑座 / Mid section support

25/1.2 - 3.2

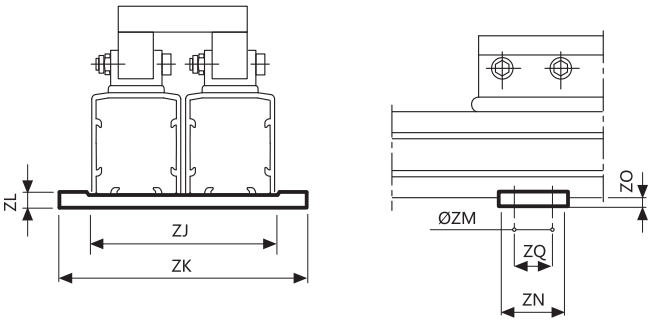

ø	ZA	ZB1	ZB2	ZC1	ZC2	ZD	ZE	ZF	ZG	ZH	ZJ	ZK	ZL	ZM	ZN	ZO	ZP1	ZP2	ZQ
2x16	1,6	18	42	26	51	3,6	4,0	14	1,5	12,5	56	64	6	Ø3,5	12	4	-	-	6,0
2x25	2,5	27	63	40	72	5,6	6,0	22	2,0	18,0	84,5	96	6	Ø5,5	20	4	-	-	10,5
2x32	-	40	84	56	97	6,6	8,0	26	4,0	20,0	109,0	121	10	Ø6,5	55	6	20	62,4	40

气缸 DUO 96 / CYLINDER DUO 96

• • • • 行程尺寸 (0100-5700 mm)
• • • • Ident-figures for stroke definition (0100-5700 mm)

型号	定购码	描述	Types	Ident.-N0.	Description
PL 2x16 PL 2x25 PL2x32	11.652. • • • • 12.552. • • • • 13.252. • • • •	标准 00: v=1 m/s 钢性负载连接 丁腈橡胶密封件 10.9 镀锌螺丝	PL 2x16 PL 2x25 PL2x32	11.652. • • • • 12.552. • • • • 13.252. • • • •	Standard 00- v=1 m/s Rigid load connection NBR-seals screws 10.9 zinc plated

安装配件 / CYLINDER MOUNTINGS

型号	定购码	气缸-ø	描述	Types	Ident.-N0.	Zyl. -ø	Description
端盖支架 (脚架) 24/1.0 24/2.0	89.581.0001 89.582.0001	PL 2 x 16 PL 2 x 25	组装套件 24/: 2 个支架 4个DIN912标准 的10.9镀锌螺丝	Cylinder mounting 24/1.0 24/2.0	89.581.0001 89.582.0001	PL 2 x 16 PL 2 x 25	Connection set 24/.: 2 brackets steel zinc plated 4 screws 10.9 zinc plated acc. DIN912
端盖支架 (脚架) 24/1.2 24/2.2	98.581.2001 89.582.2001	PL 2 x 16 PL 2 x 25	组装套件 24/: 2 个支架 4个DIN912标准 的10.9镀锌螺丝	Cylinder mounting 24/1.2 24/2.2	98.581.2001 89.582.2001	PL 2 x 16 PL 2 x 25	Connection set 24/.: 2 brackets steel zinc plated 4 screws 10.9 zinc plated acc. DIN912
端盖支架 (脚架) 24/3.1 24/3.2	89.581.0001 89.583.2001	PL 2 x 32	组装套件 24/: 2 个支架 4个DIN912标准 的10.9镀锌螺丝	Cylinder mounting 24/3.1 24/3.2	89.581.0001 89.583.2001	PL 2 x 32	Connection set 24/.: 2 brackets 4 screws 10.9 zinc plated acc. DIN912
中部支撑座 25/1.2 25/2.2 25/3.2	89.581.2002 89.582.2002 89.583.2002	PL 2 x 16 PL 2 x 25 PL 2 x 32	组装套件 25/: 缸体支架 阳极氧化铝合金	Cylinder mounting 25/1.2 25/2.2 25/3.2	89.581.2002 89.582.2002 89.583.2002	PL 2 x 16 PL 2 x 25 PL 2 x 32	Connection set 25/.: body brackets anodised aluminium


Kolbenachsprofil
PL Ø32
13.208.0000
Kolbenachsprofil
PL Ø40
001.0000
PL/F Ø32
13.278.0000

PLS-SERIE

PLS 系列

PLS

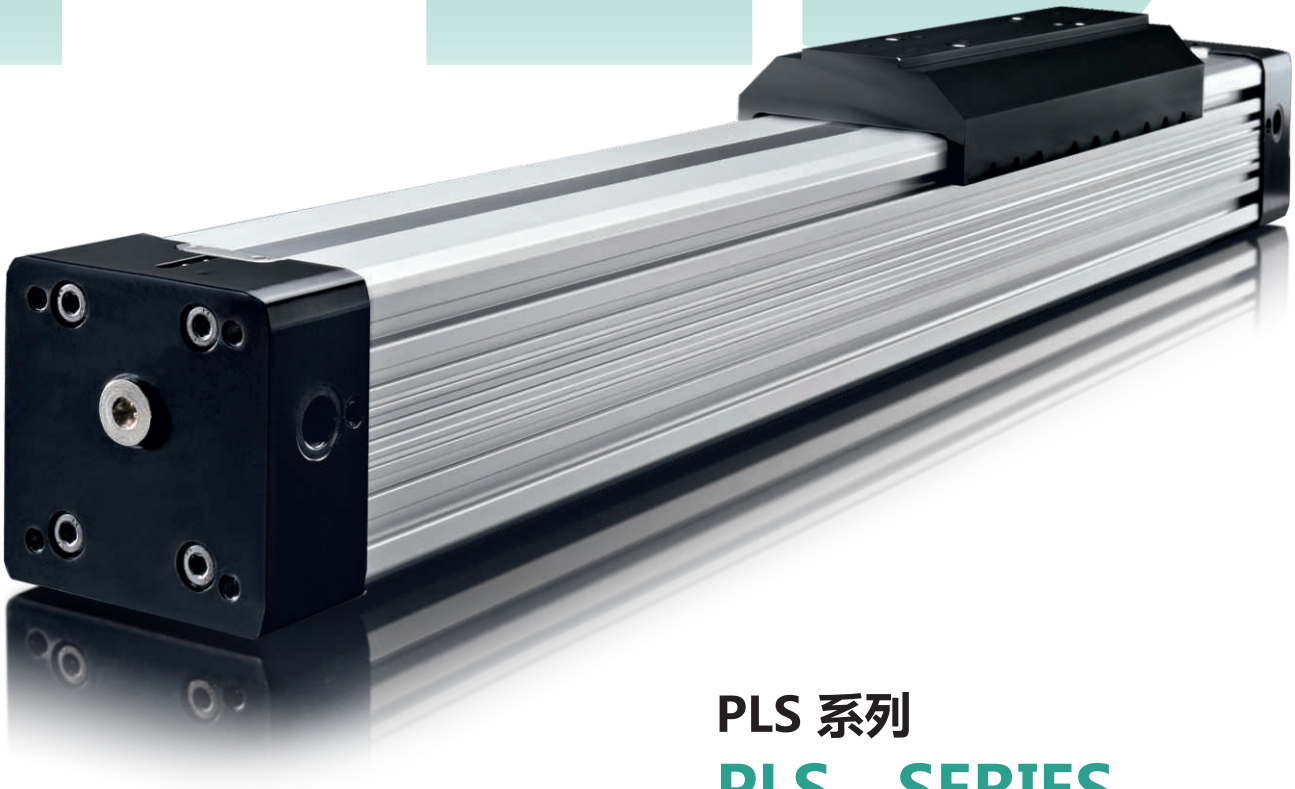

PLS 系列

PLS - SERIES

THE GLIDE

PLS(32, 40, 50, 63)系列无杆气缸是为重型负载的自动化应用设计的。特殊线性导向系统与PLF系列无杆气缸相结合，发挥出极其优越的性能。

This particular robust linear guiding system for the types PLS32 - PLS63 was specially constructed for heavy applications and automation systems.The standard well proven rodless cylinder PL..is used as the motive force in the bore sizes from ø32–63 mm.

优势 / BENEFITS

- 耐磨性高
- 噪音低
- 耐灰尘，耐潮湿
- 可调公差
- 可承受全方位的负载
- 重量轻
- 耐腐蚀
- 抗震动与耐冲击性能更强
- 滑块元件可更换
- 导轨模块可随时扩展

- High resistance to wear
- Quiet running
- High resistance to dirt & moisture
- Tolerances adjustable
- Ability to take high loads & moments in all directionsLow
- Weight
- High resistance to corrosion
- Ability to take shock loadings and vibar tions against blows and vibrations
- Interchangeable gliding elements
- The guide modul can be expanded at any time.

技术参数 / TECHNICAL DATA

设计	无杆气缸、双动				Design	Rodless cylinder, double acting				
行程					Strokes					
ø 32-63 mm	100–5700mm, 1mm的增量 (可按要求制作更长的行程)				ø 32-63 mm	100–5700mm, in increments of 1mm (longer strokes on request)				
供气口	Ø32	Ø40	Ø50	Ø63	Air connection	Ø32	Ø40	Ø50	Ø63	
	G1/4	G1/4	G1/4	G3/8		G1/4	G1/4	G1/4	G3/8	
安装位置	自由安装				Mounting	free				
力 + 力矩	见负载，作用力和力矩图表				Forces + moments	see Forces and moments				
支撑力	见中部支撑图表				Support Forces	see Deflection Diagram				
缓冲长度	见缓冲图表				Cushion Length	see Cushion Diagram				
温度	–10°C ~ +80°C (其他温度范围可定制)				Temperatures	–10°C ~ +80°C (other temperatures on request)				
压力范围	0,5–8,0 bar				Pressure range	0,5–8,0 bar				
介质	压缩空气，过滤最大50微米				Medium	compressed air, filtered max. 50µm				
材料					Materials					
缸筒	高强度阳极氧化铝合金				Barrel	High-strength anodized aluminum				
端盖	高强度阳极氧化铝合金				End caps	High-strength anodized aluminum				
活塞轴	高强度阳极氧化铝合金				Piston axle	High-strength anodized aluminum				
密封件	耐油合成材料 (NBR：v < 1m/s，VITON 可选：v ≥ 1m/s)				Seals	Oilproof synthetic material (NBR: v< 1m/s , VITON: v ≥ 1m/s)				
密封带	不锈钢				Sealing bands	Stainless steel				
活塞	耐磨合成材料				Piston caps	Wear proof synthetic material				
滑动件	耐磨合成材料				Sliding parts	Wear proof synthetic material				

气缸外形尺寸 / CYLINDER DIMENSIONS

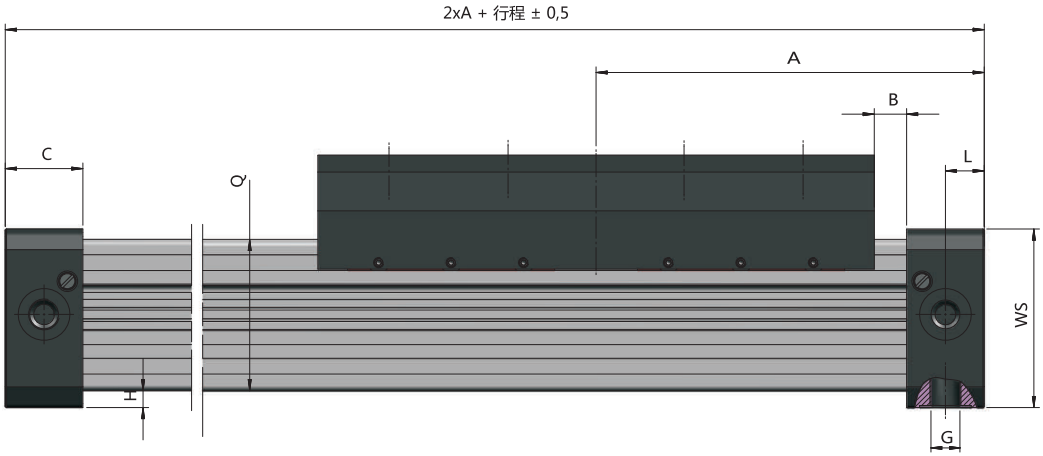

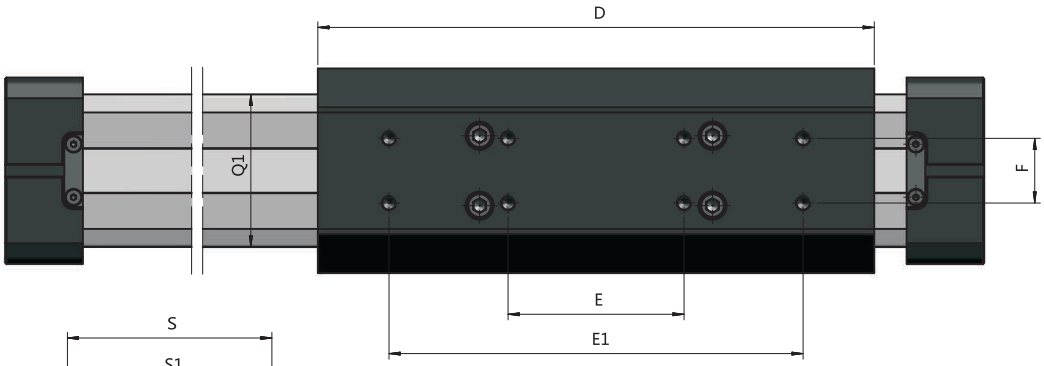

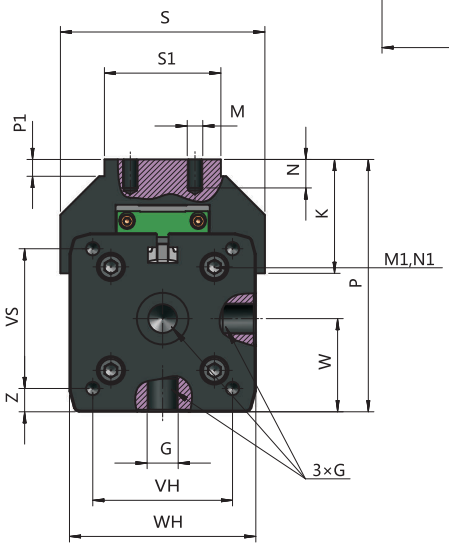

型号/System	A	B	C	D	E	E1	F	G	H	K	L	M	N	M1	N1	P	P1
PLS32	125	22	27	152	60	120	25	G1/4'	2,0	42,5	10,5	M5	10	M6	14	81,5	6,5
PLS40	150	12,5	30	215	68	160	25	G1/4'	7,0	44	15	M8	10	M6	17	97,5	6,5
PLS50	175	17,5	33	250	84	190	25	G1/4'	0,5	48,5	11,7	M8	10	M6	18	110	6,5
PLS63	215	6,5	55	320	120	240	25	G3/8'	1,5	56	25	M8	14	M8	18	137	5,0

型号/System	Q x Q1	S	S1	VH	VS	W	WH	WS	Z
PLS32	52 x 51	66	40	36	40	30	52	56	8
PLS40	58,5 x 59	79	45	54	54	36	72	69	9
PLS50	77 x 78	92	50	70	70	43,5	80	80	4
PLS63	102 x 102	116	50	78	78	62,5	106	106	14,5

负载，作用力和力矩 / FORCES AND MOMENTS

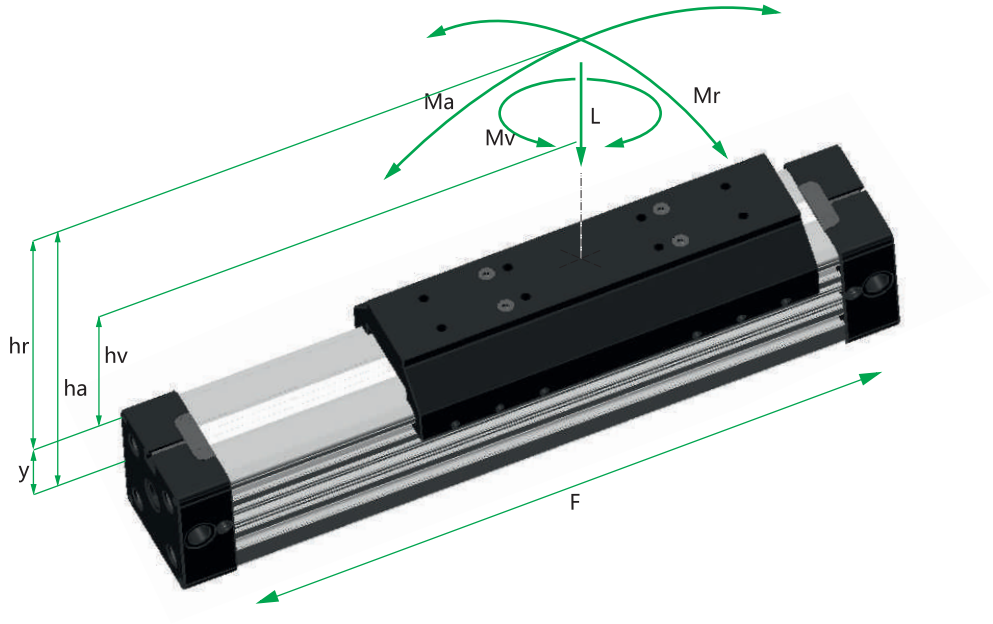

公式 /

FORMELN

$M_a = F * h_a$

$M_r = F * h_r$

$M_v = F * h_v$

气缸 Ø	32	40	50	63	Cylinder Ø	32	40	50	63
有效作用力F (6 bar) (N)	420	640	1000	1550	Efect force F (6 bar) (N)	420	640	1000	1550
最大允许负载 L (N)	495	825	1320	1815	Max. allowed load L（N）	495	825	1320	1815
最大La，Lr，Lv（N）	495	825	1320	1815	Max. La, Lr, Lv（N）	495	825	1320	1815
最大弯矩Ma (Nm)	39	99	170	315	Max. Ma (N)	39	99	170	315
最大弯矩Mr (Nm)	15	35	58	105	Max. Mr (N)	15	35	58	105
最大扭矩Mv（Nm）	39	99	170	317	Max. Mv (N)	39	99	170	317

- 上述力矩（Ma，Mr，Mv）是与线性滑轨的中心相关，负载（L）位于工件的重心，并且是与轴向，径向，中心三种力相关。工件的中心可以处于滑块范围之外。
- 通常情况下，滑块总是承受动态负载，需要考虑计算活塞的作用力（F）和气缸直线导向系统的能力。
- 请使用以下计算公式：

$$\frac{Ma}{Ma\ max} + \frac{Mr}{Mr\ max} + \frac{Mv}{Mv\ max} + \frac{L}{L\ max} \leq 1$$

- The above mentioned moments (Ma max, Mr max, Mv max) are related to the guide rail centre. The load force (L) is the summary of all single forces related to the common centre of the mass. The centre of the mass can be placed inside or outside the surface area of the carriage.
- Normally the carriage would experience a dynamic load,which has to be considered with the calculation of needed piston force (F) and capacity of the ballguided system.
- Use the following calculation formular:

$$\frac{Ma}{Ma\ max} + \frac{Mr}{Mr\ max} + \frac{Mv}{Mv\ max} + \frac{L}{L\ max} \leq 1$$

扰度图表 / DEFLECTION DIAGRAM

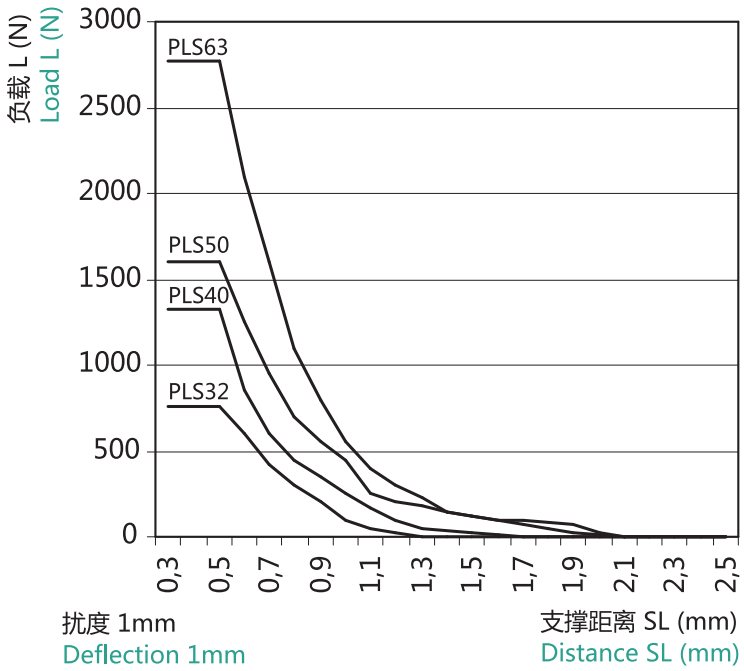

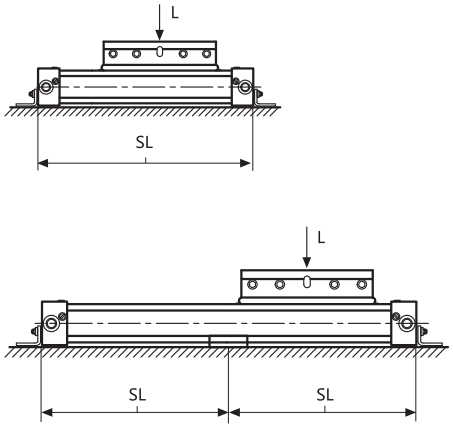

若小于最大支撑距离 SL (mm)，则无需中部支撑配件（No. 25)
Max. distance SL (mm)- free of mounting (No. 25)

中部支撑相关信息：
- 在图表最大负载（L）的作用下，支撑之间气缸产生0.5-1mm的扰度是允许的。
- 在图表最大负载（L）的作用下，支撑之间气缸产生1-1.5mm的扰度，则必须增加中部支撑配件。

Diagram Information:
- Calculated deflections without support of 0,5 – 1mm allow exceeding of supporting distance.
- Calculated deflections without support of 1mm – max 1,5mm require reduction of the supporting distance.

线性装置组合气缸 PLR / LINEAR UNIT PLR

• • • • 行程尺寸（0100-5700 mm）
• • • • Ident-figures for stroke definition (0100-5700 mm)

型号	定购码	描述	Types	Ident.-N0.	Description
PLS 40/00	94.077.• • • •	标准 PLS40 带带外部滑动导轨	PLS 40/00	94.077.• • • •	Standard PLS40 with external gliding guide
PLS 50/00	95.077.• • • •	标准 PLS50 带带外部滑动导轨	PLS 50/00	95.077.• • • •	Standard PLS50 with external gliding guide
PLS 63/00	96.377.• • • •	标准 PLS63 带带外部滑动导轨	PLS 63/00	96.377.• • • •	Standart PLS63 with external gliding guide

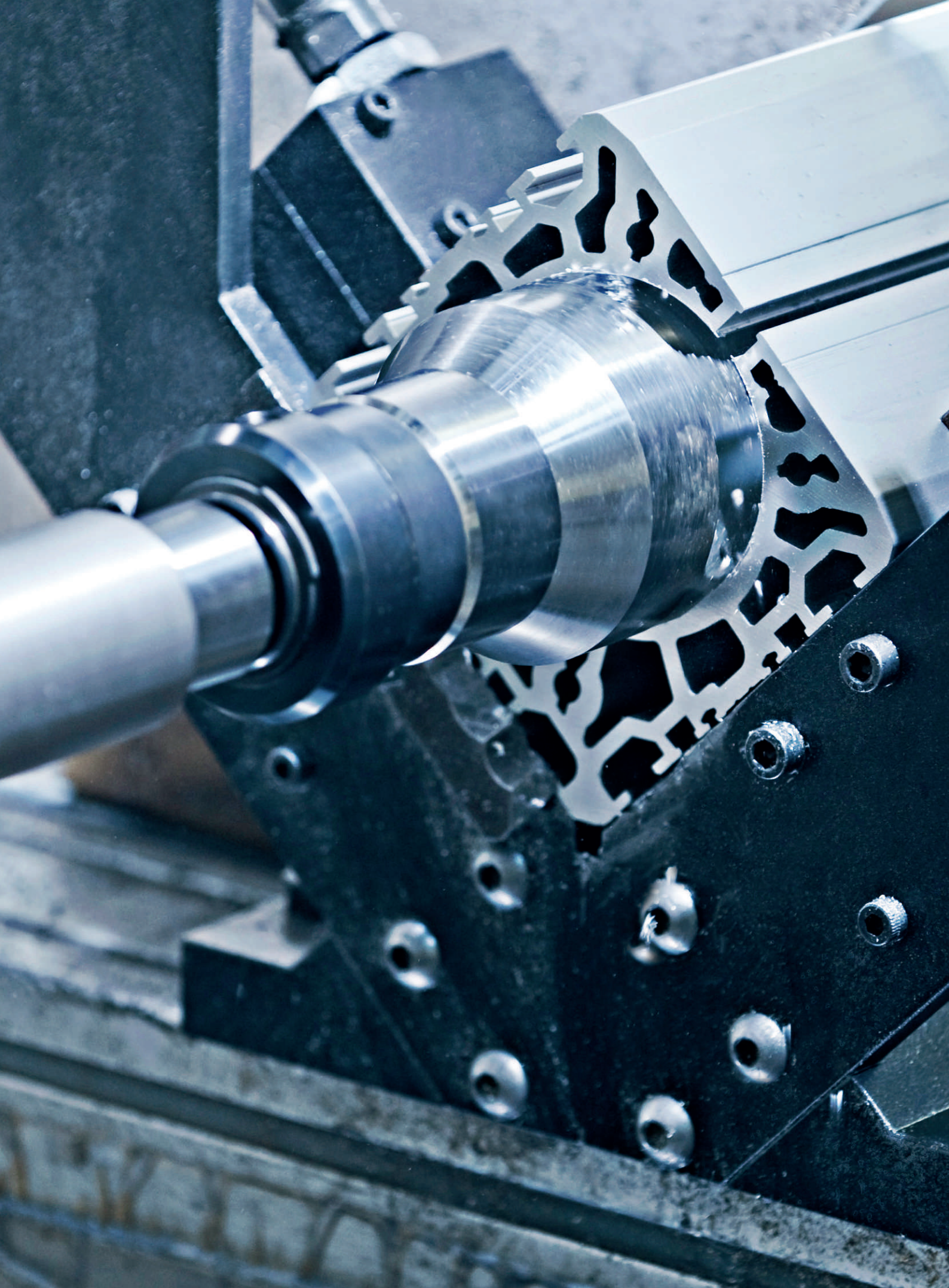

PLK-SERIE

PLK 系列

PLK

PLK 系列

PLK - SERIES

THE ROBUST

PLK系列气缸是为机床与机器人行业的搬运系统设计。功能强大的循环滚珠轴承导轨系统与PLF系列气缸相结合，发挥出了无与伦比的性能。

This extremely robust linearsystem from the series PLK 16 – 63 has been especially developed for use in the machine tool and robototics industries. The move force for this guide is our proven rodless cylinder Ø 16 – 63 mm.

Besides the proven technical aspects of our rodles cylinder, the following facts are important performance characteristics.

优势 / BENEFITS

- 负载超强（约为PLF系列的4倍）
- 全方位高静载能力
- 运行顺畅无噪音
- 坚固的轴承座
- 易操作的油嘴
- 经加硬和研磨的直线导轨
- 低摩擦轴承
- 互换性强
- 直线导轨可自由选择单滑块或双滑块

- High loading characteristics
- High static loading in all directions
- Quiet and smooth running
- Robust bearing housing
- Easy access to grease nipple
- Hardened and grinded guiderail
- Low friction bearing
- Easy interchangeability
- UNO/TANDEM Carriage system

技术参数 / TECHNICAL DATA

设计	无杆气缸、双动						Design	Rodless cylinder, double acting						
行程							Strokes							
ø 16 mm	100–3300mm, 1mm的增量						ø 16 mm	100–3300mm, in increments of 1mm						
ø 25-63 mm	100–5700mm, 1mm的增量 (可按要求制作更长的行程)						ø 25-63 mm	100–5700mm, in increments of 1mm (longer strokes on request)						
供气口	Ø16	Ø25	Ø32	Ø40	Ø50	Ø63	Air connection	Ø16	Ø25	Ø32	Ø40	Ø50	Ø63	
	M5	G1/8	G1/4	G1/4	G1/4	G3/8		M5	G1/8	G1/4	G1/4	G1/4	G3/8	
安装位置	自由安装						Mounting	free						
力 + 力矩	见负载，作用力和力矩图表						Forces + moments	see Forces and moments						
支撑力	见中部支撑图表						Support Forces	see Deflection Diagram						
缓冲长度	见缓冲图表						Cushion Length	see Cushion Diagram						
温度	–10°C ~ +80°C（其他温度范围可定制）						Temperatures	–10°C ~ +80°C (other temperatures on request)						
压力范围	0,5–8,0 bar						Pressure range	0,5–8,0 bar						
介质	压缩空气，过滤最大50微米						Medium	compressed air, filtered max. 50µm						
材料							Materials							
缸筒	高强度阳极氧化铝合金						Barrel	High-strength anodized aluminum						
端盖	高强度阳极氧化铝合金						End caps	High-strength anodized aluminum						
活塞轴	高强度阳极氧化铝合金						Piston axle	High-strength anodized aluminum						
密封件	耐油合成材料（NBR：v < 1m/s，VITON 可选：v ≥ 1m/s）						Seals	Oilproof synthetic material (NBR: v< 1m/s , VITON: v ≥ 1m/s)						
密封带	不锈钢						Sealing bands	Stainless steel						
活塞	耐磨合成材料						Piston caps	Wear proof synthetic material						
滑动件	耐磨合成材料						Sliding parts	Wear proof synthetic material						

气缸外形尺寸 / CYLINDER DIMENSIONS

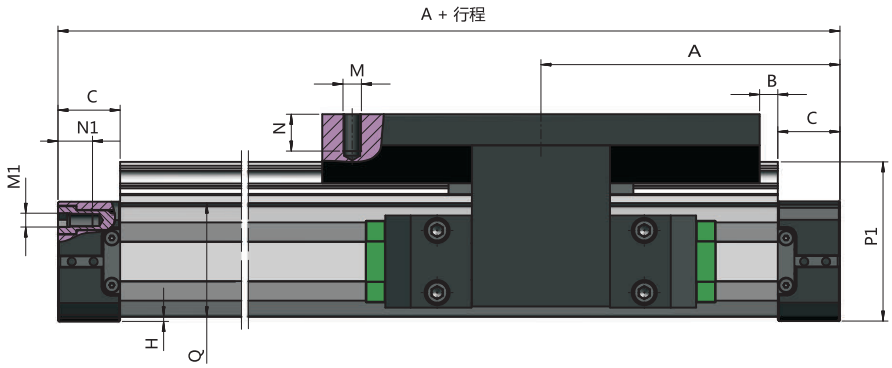

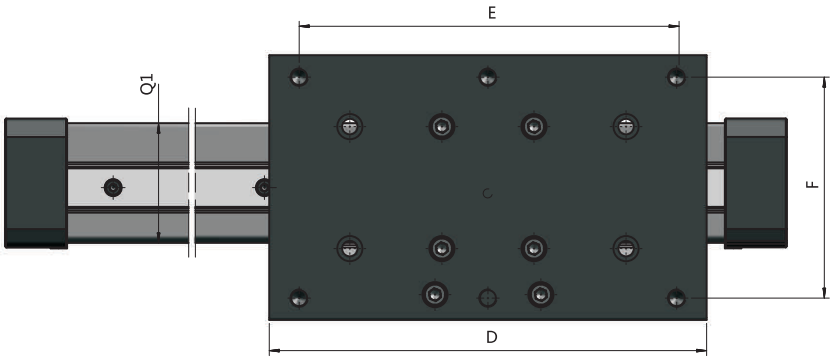

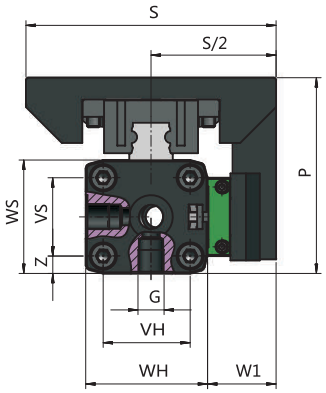

ø	A	B	C	D	E	F	G	H	M	N	M1	N1	P	P1	Q x Q1	S	S2	VH	VS	WH	WS	W1	Z
16	65	5	15	90	70	36	M5	1,0	M4	10	M3	7	48,9	34	24,5 x 25	63	31,5	18	18	27	27	18	4,5
25	100	4,5	23	145	125	64	1/8	2,0	M6	12	M5	10	73	52,3	36 x 36	80	40	27	27	40	40	20	6,5
32	125	3	27	190	164	96	1/4	2,0	M8	13	M6	14	90	69,3	48 x 52	115	57,5	40	36	56	52	30,5	8,0
40	150	25	30	190	164	96	1/4	7,0	M8	18	M6	17	105	84,3	58 x 58	115	57,5	54	54	69	72	24,5	9,0
50	175	34,5	33	215	180	110	1/4	1,0	M8	20	M6	18	130	102,3	77 x 78	130	65	70	70	80	80	28,5	5,0
63	215	57,5	50	215	180	140	3/8	2,0	M8	20	M8	18	155	128,3	102 x 102	170	85	78	78	106	106	31,5	14

缓冲器 / Shock Absorber

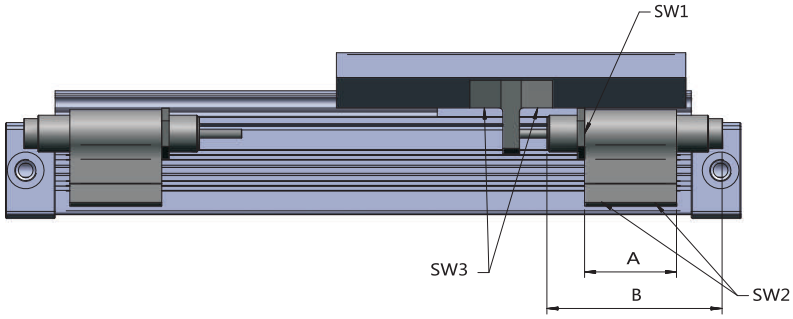

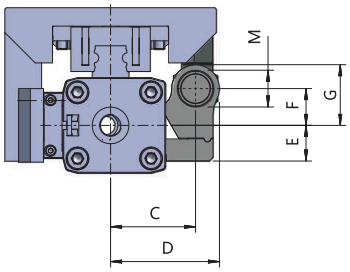

ø	A	B	C	D	E	F	G	M	SW1	SW2	SW3
16	28	43,2	22,2	29,2	13,2	9	16	M10 x 1	SW13	SW3	SW3
25	50	81,3	31,4	41,4	11,7	15,5	25,5	M14 x 1,5	SW17	SW4	SW4
32	50	95,5	46,2	59,2	19,4	20	33	M20 x 1,5	SW24	SW4	SW4
40	50	94,5	47,2	60,2	19,4	20	33	M20 x 1,5	SW24	SW4	SW4
50	70	102,5	63	79	11	31	59	M25 x 1,5	-	-	-
63	-	-	-	-	-	-	-	-	-	-	-

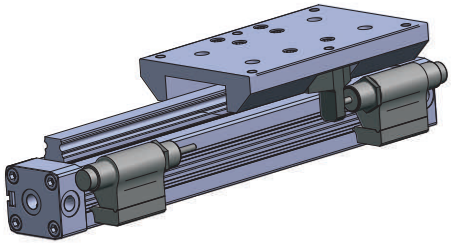

力和力矩 / FORCES AND MOMENTS

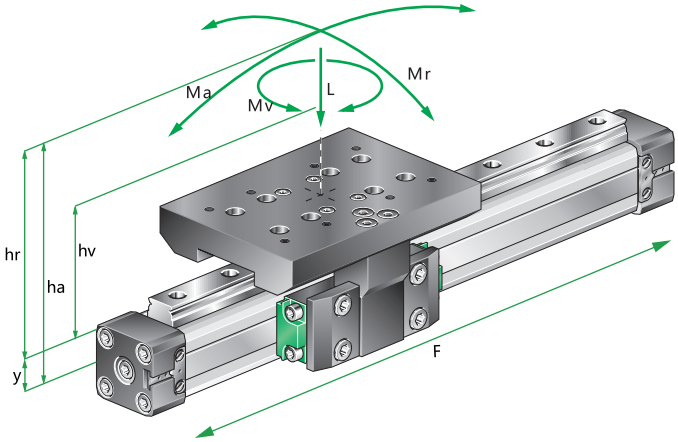

公式 /

FORMELN

$M_a = F * h_a$

$M_r = F * h_r$

$M_v = F * h_v$

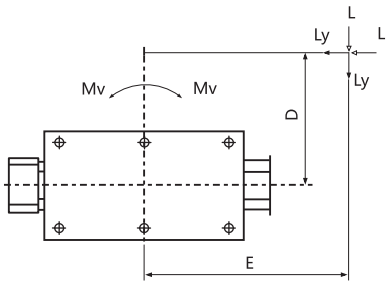

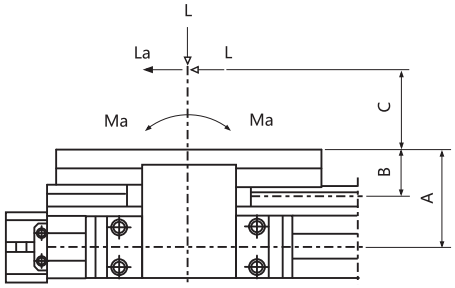

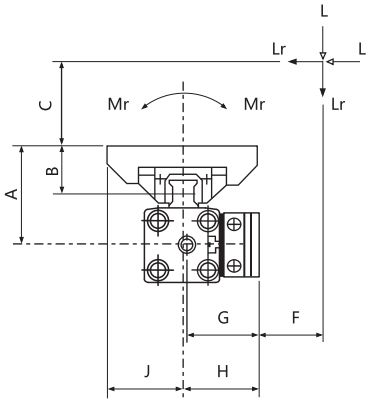

单滑块系统 / UNO CARRIAGE SYSTEM

气缸 Ø	16	25	32	40	50	63	Cylinder Ø	16	25	32	40	50	63
有效作用力F (6 bar) (N)	110	250	420	640	1000	1550	Effect force F (6 bar) (N)	110	250	420	640	1000	1550
缓冲长度 (mm)	15	21	26	32	32	40	Cushioning (mm)	15	21	26	32	32	40
A (mm)	35,0	53,0	64,0	69	90	102	A (mm)	35,0	53,0	64,0	69	90	102
B (mm)	19,0	26,0	29,7	29,7	40	38,5	B (mm)	19,0	26,0	29,7	29,7	40	38,5
C/D/E/F (mm)	按设计定制尺寸						C/D/E/F (mm)	Dimensions according design					
G (mm)	30,3	38,0	55,0	54,5	65	75	G (mm)	30,3	38,0	55,0	54,5	65	75
H (mm)	31,5	40,0	57,5	57,5	68,5	85	H (mm)	31,5	40,0	57,5	57,5	68,5	85
J (mm)	31,5	40,0	57,5	57,5	65	85	J (mm)	31,5	40,0	57,5	57,5	65	85
最大负载力 L (N)	500	1500	2950	3960	7500	7500	Max. allowed load L (N)	500	1500	2950	3960	7500	7500
最大允许力矩La,Lr,Lv (N)	500	1500	2950	3960	4000	4000	Moment forces max.La,Lr,Lv (N)	500	1500	2950	3960	4000	4000
最大轴向允许弯曲力矩 Ma (Nm)	4	40	61	115	580	580	Axial moments max Ma (Nm)	4	40	61	115	580	580
最大径向允许弯曲力矩 Mr (Nm)	6	14	30	52	210	210	Radial moments max Mr (Nm)	6	14	30	52	210	210
最大允许中心扭矩 Mv (Nm)	11	40	62	70	580	580	torsion moments max Mv (Nm)	11	40	62	70	580	580

- 上述力矩（Ma，Mr，Mv）是与线性滑轨的中心相关，负载（L）位于工件的重心，并且是与轴向，径向，中心三种力相关。工件的中心可以处于滑块范围之外。
- 通常情况下，滑块总是承受动态负载，需要考虑计算活塞的作用力（F）和气缸直线导向系统的能力。
- 请使用以下计算公式：

$$\frac{Ma}{Ma\ max} + \frac{Mr}{Mr\ max} + \frac{Mv}{Mv\ max} + \frac{L}{L\ max} \leq 1$$

- The above mentioned moments (Ma max, Mr max, Mv max) are related to the guide rail centre. The load force (L) is the summary of all single forces related to the common centre of the mass. The centre of the mass can be placed inside or outside the surface area of the carriage.
- Normally the carriage would experience a dynamic load,which has to be considered with the calculation of needed piston force (F) and capacity of the ballguided system.
- Use the following calculation formular:

$$\frac{Ma}{Ma\ max} + \frac{Mr}{Mr\ max} + \frac{Mv}{Mv\ max} + \frac{L}{L\ max} \leq 1$$

力和力矩 / FORCES AND MOMENTS

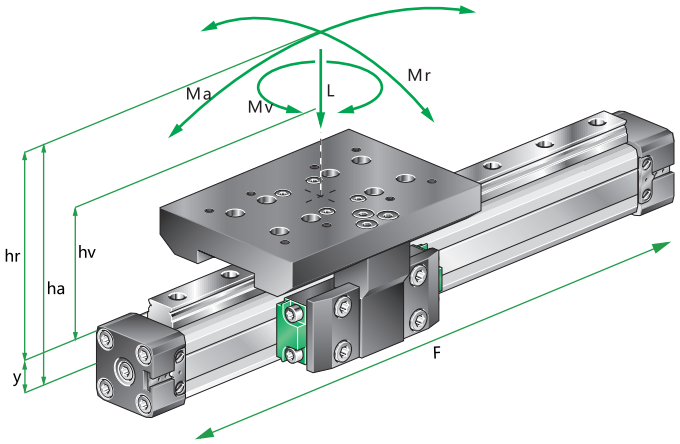

公式 / FORMELN

$M_a = F * h_a$

$M_r = F * h_r$

$M_v = F * h_v$

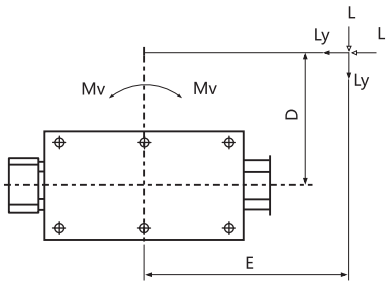

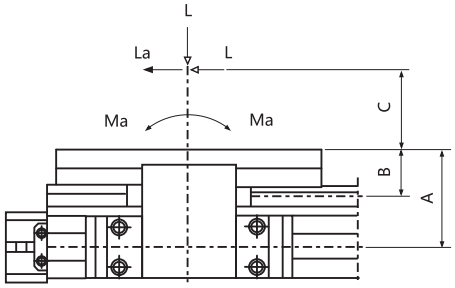

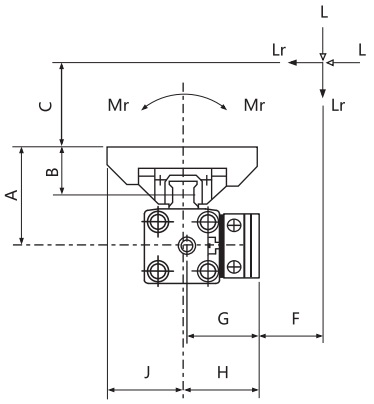

双滑块系统 / TANDEM CARRIAGE SYSTEM

气缸 Ø	16	25	32	40	50	63
有效作用力F (6 bar) (N)	110	250	420	640	1000	1550
缓冲长度 (mm)	15	21	26	32	32	40
A (mm)	35,0	53,0	64,0	69	90	102
B (mm)	19,0	26,0	29,7	29,7	40	38,5
C/D/E/F (mm)	按设计定制尺寸					
G (mm)	30,3	38,0	55,0	54,5	65	75
H (mm)	31,5	40,0	57,5	57,5	68,5	85
J (mm)	31,5	40,0	57,5	57,5	65	85
最大负载力 L (N)	500	1500	2950	3960	7500	7500
最大允许力矩La,Lr,Lv (N)	500	1500	2950	3960	4000	4000
最大轴向允许弯曲力矩 Ma (Nm)	4	40	61	115	580	580
最大径向允许弯曲力矩 Mr (Nm)	6	14	30	52	210	210
最大允许中心扭矩 Mv (Nm)	11	40	62	70	580	580

Cylinder Ø	16	25	32	40	50	63
Effect force F (6 bar) (N)	110	250	420	640	1000	1550
Cushioning (mm)	15	21	26	32	32	40
A (mm)	35,0	53,0	64,0	69	90	102
B (mm)	19,0	26,0	29,7	29,7	40	38,5
C/D/E/F (mm)	Dimensions according design					
G (mm)	30,3	38,0	55,0	54,5	65	75
H (mm)	31,5	40,0	57,5	57,5	68,5	85
J (mm)	31,5	40,0	57,5	57,5	65	85
Max. allowed load L (N)	500	1500	2950	3960	7500	7500
Moment forces max.La,Lr,Lv (N)	500	1500	2950	3960	4000	4000
Axial moments max Ma (Nm)	4	40	61	115	580	580
Radial moments max Mr (Nm)	6	14	30	52	210	210
torsion moments max Mv (Nm)	11	40	62	70	580	580

- 上述力矩（Ma，Mr，Mv）是与线性滑轨的中心相关，负载（L）位于工件的重心，并且是与轴向，径向，中心三种力相关。工件的中心可以处于滑块范围之外。
- 通常情况下，滑块总是承受动态负载，需要考虑计算活塞的作用力（F）和气缸直线导向系统的能力。
- 请使用以下计算公式：

$$\frac{Ma}{Ma\ max} + \frac{Mr}{Mr\ max} + \frac{Mv}{Mv\ max} + \frac{L}{L\ max} \leq 1$$

- The above mentioned moments (Ma max, Mr max, Mv max) are related to the guide rail centre. The load force (L) is the summary of all single forces related to the common centre of the mass. The centre of the mass can be placed inside or outside the surface area of the carriage.
- Normally the carriage would experience a dynamic load,which has to be considered with the calculation of needed piston force (F) and capacity of the ballguided system.
- Use the following calculation formular:

$$\frac{Ma}{Ma\ max} + \frac{Mr}{Mr\ max} + \frac{Mv}{Mv\ max} + \frac{L}{L\ max} \leq 1$$

循环滚珠线性导轨组合气缸PLK / LINEAR UNIT PLK

• • • • 行程尺寸 (0100-5700 mm)
• • • • Ident-figures for stroke definition (0100-5700 mm)

型号	定购码	描述	Types	Ident.-N0.	Description
PLK16.1	71.691. • • • •	单滑块 无杆气缸 PLF16 线性装置	PLK16.1	71.691. • • • •	Uno Rodless cylinder PLF16 Linear unit
PLK16.2	71.692. • • • •	双滑块 无杆气缸 PLF16 线性装置	PLK16.2	71.692. • • • •	Tandem Rodless cylinder PLF16 Linear unit
PLK25.1	72.591. • • • •	单滑块 无杆气缸 PLF25 线性装置	PLK25.1	72.591. • • • •	Uno Rodless cylinder PLF25 Linear unit
PLK25.2	72.592. • • • •	双滑块 无杆气缸 PLF25 线性装置	PLK25.2	72.592. • • • •	Tandem Rodless cylinder PLF25 Linear unit
PLK32.1	73.291. • • • •	单滑块 无杆气缸 PLF32 线性装置	PLK32.1	73.291. • • • •	Uno Rodless cylinder PLF32 Linear unit
PLK32.2	73.292. • • • •	双滑块 无杆气缸 PLF32 线性装置	PLK32.2	73.292. • • • •	Tandem Rodless cylinder PLF32 Linear unit
PLK40.1	74.091. • • • •	单滑块 无杆气缸 PLF40 线性装置	PLK40.1	74.091. • • • •	Uno Rodless cylinder PLF40 Linear unit
PLK40.2	74.092. • • • •	双滑块 无杆气缸 PLF40 线性装置	PLK40.2	74.092. • • • •	Tandem Rodless cylinder PLF40 Linear unit
PLK50.1	75.091. • • • •	单滑块 无杆气缸 PLF50 线性装置	PLK50.1	75.091. • • • •	Uno Rodless cylinder PLF50 Linear unit
PLK50.2	75.092. • • • •	双滑块 无杆气缸 PLF50 线性装置	PLK50.2	75.092. • • • •	Tandem Rodless cylinder PLF50 Linear unit
PLK63.1	76.391. • • • •	单滑块 无杆气缸 PLF63 线性装置	PLK63.1	76.391. • • • •	Uno Rodless cylinder PLF63 Linear unit
PLK63.2	76.392. • • • •	双滑块 无杆气缸 PLF63 线性装置	PLK63.2	76.392. • • • •	Tandem Rodless cylinder PLF63 Linear unit

特殊要求：可按要求制做氟橡胶密封件和不锈钢 / Special version: Viton seals and stainless steel on request

缓冲器安装配件 / SHOCK ABSORBE MOUNTINGS

型号	定购码	气缸-ø	描述	Types	Ident.-N0.	Zyl. -ø	Description
缓冲器安装支架 Ø 16 Ø 25 Ø 32 - 40 Ø 50 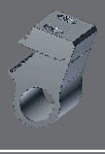	71.631.0000 72.531.0000 73.231.0000 75.031.0000	PLK16 PLK25 PLK32-40 PLK50	颜色：本色 材料： 阳极氧化铝合金	Shock Absorber Mounting Ø 16 Ø 25 Ø 32 - 40 Ø 50 	71.631.0000 72.531.0000 73.231.0000 75.031.0000	PLK16 PLK25 PLK32-40 PLK50	Colour: natur Material: Zinc diecasting
缓冲器挡块 Ø 16 Ø 25 Ø 32 - 40 Ø 50 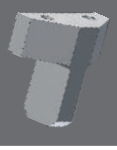	71.631.0003 72.531.0003 73.231.0003 75.031.0003	PLK16 PLK25 PLK32-40 PLK50	颜色：本色 材料： 阳极氧化铝合金	Shock Absorber Stop Ø 16 Ø 25 Ø 32 - 40 Ø 50 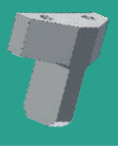	71.631.0003 72.531.0003 73.231.0003 75.031.0003	PLK16 PLK25 PLK32-40 PLK50	Colour: natur Material: Zinc diecasting

感应开关 / SENSOR

感应开关ZRS/ZES 系列
CyLINDER SENSORS ZRS/ZES

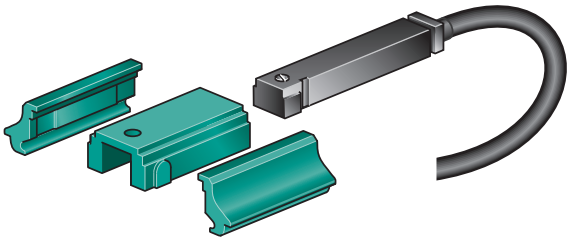

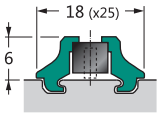

Ø16 mm

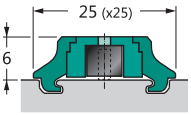

Ø25, 32, 40 mm

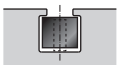
Ø50, 63 mm

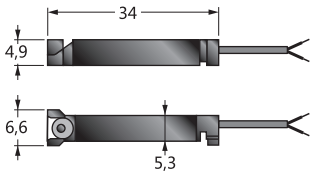

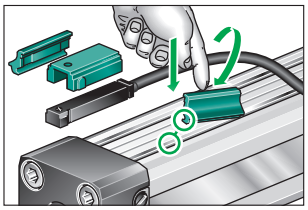

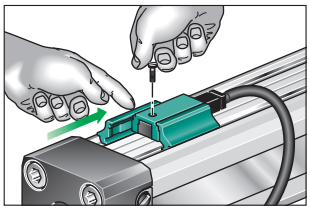

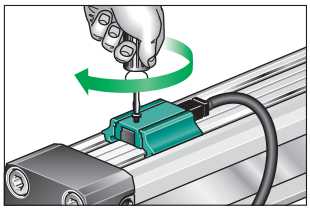

ZRS-11

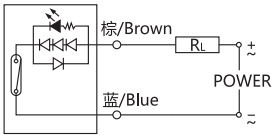

ZES-22

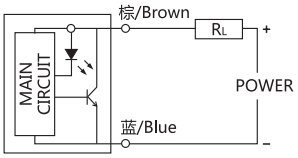

ZES-22N

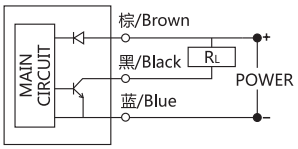

ZES-22P

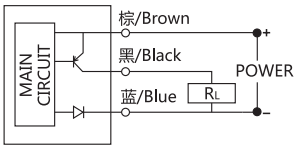

技术参数 / TECHNICAL DATA

型号	ZRS-11	ZES-22	ZES-22N	ZES-22P
配线方式	2 线式		3 线式	
开关逻辑	SPST, 常开型	电子式无接点，常开型		
输出接点形式	有接点	无接点	无接点 NPN	无接点 PNP
使用电压范围	5~240V DC/AC	10~28V DC		
最大开关电流	100mA max.	50mA max.	200mA max.	
接点容量（注1）	10W max.	1.5W max.	5.5W max.	
消耗电流	-		10mA @ 24V DC max.	
内部电压降	3.0V max.	3.5V max.	1.5V max.	
泄漏电流	-	0.8mA max.	0.05mA max.	
指示灯颜色	红色 LED			黄色 LED
电线	ø2.8, 2C, PU		ø2.8, 3C, PU	
最大切换工作频率	200Hz	1000Hz		
感应磁场强度（注2）	75 高斯	50 高斯		
使用温度范围	-10℃~+70℃			
耐冲击（注3）	30G	50G		
耐振动（注4）	9G			
保护构造等级	IEC 60529 IP67			
保护回路（注5）	1	2	2, 3, 4	

TYPE	ZRS-11	ZES-22	ZES-22N	ZES-22P
Wiring Method	2-Wire Type		3-Wire Type	
Swictching Logic	SPST, NO Type	Solid State Output, Normally Open		
Sensor Type	Reed Switch	-	NPN	PNP
Operating Voltage	5~240V DC/AC	10~28V DC		
Switching Current	100mA max.	50mA max.	200mA max.	
Contact rating(*1)	10W max.	1.5W max.	5.5W max.	
Current Consumption	-		10mA @ 24V DC max.	
Voltage Drop	3.0V max.	3.5V max.	1.5V max.	
Leakage Current	-	0.8mA max.	0.05mA max.	
Indicator	Red LED			Yellow LED
Cable	ø2.8, 2C, PU		ø2.8, 3C, PU	
Operating Frequency	200Hz	1000Hz		
Magnet Requirement (*2)	75Gauss	50Gauss		
Temperature Range	-10℃~+70℃			
Shock (*3)	30G	50G		
Vibration (*4)	9G			
Enclosure Classification	IEC 60529 IP67			
Protection Circuit (*5)	1	2	2, 3, 4	

注：
1、不可超过接点容量（P = VxI）。
2、量测使用之标准磁石：ø15.5xø8x5t（异性橡胶磁石）。
3、正弦波/X、Y、Z 3轴向/每一轴向3回 / 每一回时间11ms.
4、复振幅1.5mm/10Hz+22Hz-10Hz扫频，持续1分钟/每次X、Y、Z轴向操作1小时。
5、1 = 无/2 = 输出短路保护/3 = 电源逆接保护/4 = 突波吸收保护

NOTE:
1. WARNING: Never exceed rating (Watt=Voltage x Amperage). Permanent demage to sensor will occur.
2. Measuring standard target: ø15.5Xø8X5t (Anisotropy rubber magnet)
3. Sin wave / X , Y , Z 3 directions / 3 times each direction / 11 ms each time.
4. Double amplitude 1.5 mm / 10Hz~55Hz~10Hz (Sweep 1 min) / X , Y , Z 3 directions / 1 hour each time.
5. 1=None / 2=Short-circuit / 3=Power Source Reverse polarity / 4=Surge Suppression

感应开关 / SENSOR

型号	定购码	描述	Types	Ident.-N0.	Description
ZRS-11	89.999.4010	有接点磁簧管开关，2线式，线长2米 红色 LED	ZRS-11	89.999.4010	Cylinder Reed Sensor 2-Wire, cable 2m, Red LED
ZES-22	89.999.4005	电子式无接点开关，2线式，线长2米 红色 LED	ZES-22	89.999.4005	Cylinder Solid State Output Sensor 2-Wire, cable 2m, Red LED
ZES-22N	89.999.4006	电子式无接点开关，NPN，3线式， 线长2米，红色 LED	ZES-22N	89.999.4006	Cylinder Solid State Output Sensor NPN 3-Wire, cable 2m, Red LED
ZES-22P	89.999.4007	电子式无接点开关，PNP，3线式， 线长2米，黄色 LED	ZES-22P	89.999.4007	Cylinder Solid State Output Sensor PNP 3-Wire, cable 2m, Yellow LED
W-2	89.999.0012	感应开关安装座	W-2	89.999.0012	Switch Mounting for ZRS and ZES sensor
ZRS-11S	89.999.4010	ZRS-11有接点磁簧管开关， 感应开关安装座	ZRS-11S	89.999.4010	ZRS-11 Cylinder Reed Sensor W-2 Switch Mounting
ZES-22S	89.999.4005	ZES-22电子式无接点开关， 感应开关安装座	ZES-22S	89.999.4005	ZES-22 Cylinder Reed Sensor W-2 Switch Mounting
ZES-22NS	89.999.4006	ZES-22N电子式无接点开关，NPN， 感应开关安装座	ZES-22NS	89.999.4006	ZES-22N Cylinder Reed Sensor W-2 Switch Mounting
ZES-22PS	89.999.4007	ZES-22P电子式无接点开关，PNP， 感应开关安装座	ZES-22PS	89.999.4007	ZES-22P Cylinder Reed Sensor W-2 Switch Mounting

* 开关线长3米，5m请在订货时说明。
* 开关如需要M8水平出线或M8垂直出线，请在订货时说明。
* 如有特殊要求，请在订货时说明。

* Sensor cable legth 3m, 5m on request when order.
* M8 straight connection /M8 angle connection on request when order.
* Special version on request when order.

我们在全球30多个国家设有办事处与经销商，以优质的产品服务客户。

With partners located all over the World we provide the service and consultants of our product range in various languages.

XFLOW **东莞兴富隆工业有限公司**

地址：广东省东莞市东城区温竹路9号

E-mail：sales@xflow-world.com

Http:// www.xflow-world.com